CHICAGO TI/99 USER'S GROUP

PRESENTS

USER'S GROUPS

HARDWARE REPRINTS

A COLLECTION OF HARDWARE ARTICLES
FROM OTHER TI/99 USERS GROUPS
NEWSLETTERS

Group, Author or Newsletter Name noted
where acceptable.

Title	Author	User Group
Smoke.	Joe Nolan	Tacoma 99'ers
The care and feeding of your PC's.		99er's online
How to repair an Electronic instrument.		Madarea 99er
Cleaning Your 99/4a.	Bob Daggitt	Siouxland Ninety Niner
Cure For Lockup On The Ti-99/4a.	Doug Thomas	Philadelphia
Rgb Converter Schematic.		Calgary 99'ers
Backround Noise With the RF modulator.		
Video Moniitor for Your For Your TI.	Rich Rehfeldt	Computer Bridge
Build Your Own Dual Cassette Cable.	Rich Renth	Computer Bridge
Green Monitor Blues Color Killer for the TI-99/4A.	Paul Landie/Richard Bailey	NH 99'ers
Joystick/Alpha Lock Key Fix.		
Improve Video.	Bob Lawson	
Convert Tomy Controllers.	James P. Donovan	Bluegrass 99'ers
Trackball for the TI.		Airport Area 99'ers
Atari to Ti Joystick Conversion.	Mark G. Webb	R/d Computing
Burglar Alarm.		
Home Control.		Ryte Data
Tic Tac Toe With Light-pen.	Jim Bures	CC 99'ers

Title	Author	User Group
Light pen.		Madarea 99'er
Light Pen Load.		San Fransico 99'er
Widget Module Brace.	C.B. Doan	
Do It Yourself Module Port Expander.	Terry Ross	HV99'ers
The Case of The Missing Cartridge.	Denis A. Dann	Milwaukee 99'er
Speech Inside The Console.		
Instalation Of Reset And Hold Switch.	Gordon Bradshaw	
Add On For The Console And Super EA.		
Reset Switch.		
Adding To Your Supercart.	Jim Mcculloch	Chicago User Group
More For Your Module.	Jim Ellis/Dave Ratcliffe	99'ers news
Super Supercart.	Richard Corder	West Jax 99'ers
Install Extended Basic Inside Your Console.	John F. Willforth	West Pen 99'ers
Installation of Grom Inside The TI Console.	Patrick Ugorcak	OH-MI-TI
Expansion box 32k with 8K module Ram.	Joe Spiegel	West penn 99'ers

Title	Author	User Group
32K inside the Speech Synthsizer.	John Wilforth	
32K On The 16 Bit Bus.	John Culow	
Horizon Ramdisk 256K Expansion Project.	Edward A. Hallett	Southwest 99'ers
Foundation Edge.	Travis Watford	Delphi
IEEE Schematic.		
Electronic Adventure. (Audio Amp)	Pat Saturn	Spirit Of 99
Enhance Computer Audio.	Dallas Phillips	BlueGrass 99'ers
Give Your Avatex 1200 Some Sound.		
Auto Dialer Schematic.	Mac Shoop	Mid South 99'ers
Auto Dialer/Auto Answer.	Ron Gries	New Horizon Club
Multiple Drive Connection.	Bud Wright	Spirit Of 99'ers
Multi Task Drive.	C. B. Doan	
Adding a Second Drive.	Helene Labonville/Ellen J. Rule	N.H. 99er's
Double Side Dusk Hold 254 Files.	Bruce Hall	
Installing A Qume DSDD Drive.	Harold Holt/ Gene Breer	
Installing Ibm DSDD Drive.		

Title	Author	User Group
HomeBrew Keypad.	Jim Edward	SFV 99'ers
Dicussion of Attaching 10 Functiion Keys To The TI-99/4A.	Gary Bishop	Cedar Valley 99'ers
Keyboard Construction.	Stephan Andrews	
Expanding Your TI .	Keven Mantooth/Chad Davis	
Numeric Keypad	Dave Cotner	
Cocomp Triple Tech Modification.	Edward A. Hallett	SouthWest 99'ers
Poor Person A/B Printer Switch.		
HomeMade Printer.	Brian Mcfeeter	Pekin User Group.
Computer Center.	Jim Mekeell	Northcoast 99'er
Serial To Paralle.l	Willard Chaney	
Wiring A Printer.	Dennis Porpora	
Rs232 to Pio Trick.		A9cug
Serial Data Transmission.	Jim Mekell	Northcoast 99'ers
Print Head Cleaning.	Chuck Reinhart	LITI 99'ers
Power Supply Fix.	Raymond Langevin	Northeast 99'ers
P-Box Power Supply Modification.		
Modification To the Cooling System In The Ti 99/4A.	John A Frazier	Great Lake Computer Group
Surge Protection.	Richard Weaver	99'ers online

Title	Author	User Group
Ti-99/4a Operated Light Appliance Controller.	Collin Mahoney	SFV 99'ers
Cable Box.	Jim Edward	SFV 99'ers
Pbox Relay.	Howard A Brain	Carnation City 99'er
GramKracker Mod.		
Wiring Diagrams And Pins Position.		
Hardware News.		
Ti-99/4A Memory Architecture.	John F. Willford	
Pcboard Layout.		
General Componet Layout.		
TI-99/4a Logic Board Layout.		Lima User Group

SMOKE

A sheet of paper crossed my desk the other day and as I read it, realization of a Basic Truth came over me. So simple! So obvious we couldn't see it! The author, of unknown origin, I think has discovered what makes integrated circuits work. He says that smoke is the thing that makes IC's work because every time you let the smoke out of an IC it stops working. I was flabbergasted! Of course! Smoke makes all electrical things work. Remember the last time the smoke escaped from the Lucas voltage regulator on your car? Didn't it quit working? I sat and smiled like an idiot as more of the truth dawned. It's the wiring harness that carries smoke from one device to another in your machine and when the harness springs a leak, it lets the smoke out of everything all at once and then nothing works. The starter motor requires large quantities of smoke to operate properly, that's why the wire going to it is so big.

There's more. Feeling very smug, I continued to expand my hypotheses. Why are Lucas electrics more likely to leak smoke than say, Bosch? Hmmm. AHA! Lucas is British. Things British always leak! British convertible tops leak water. British engines leak oil. The British government leaks defense secrets. Naturally British electrics leak smoke.

So, in view of all this, do everything you can to keep the smoke in your computer.

I honestly believe there is more to the working of a computer than the smoke in the integrated circuits, but remember that I'm the guy who, when I couldn't move my player up while playing a game, disassembled my console to make repairs. Logic told me that since all the other functions of the joystick worked that the problem must be a faulty wire connection in the computer. I solved the problem in surprisingly few hours, and have learned even more since then, so if you have any questions, direct them my way.

Joe Nollan

THE CARE AND FEEDING OF PC'S

CLEANLINESS is next to godliness. Keep the areas around the computer free of excessive dirt, dust, moisture and materials that obstruct air flow. Do not place books or papers on top of monitors or disk drives as this may interfere with the machine's ventilation.

MAINTAIN the proper AC electrical grounding as required, and correct any conditions that do not meet specifications. Provide dedicated outlets, or be sure that other electrical devices, including monitors, heating applicances, fluorescent and blinking lights, aren't plugged into the same outlet or circuit. Ensure that all cables are free of kinks or tight bends.

MINIMIZE the accumulation of static electricity in carpeted areas by using properly grounded static mats or anti-static carpet spray as required.

DON'T MOVE the disk drive while it is operating. Make sure it is properly grounded with an AC circuit which is free of interference from appliances or fluorescent lights.

THE READ-WRITE heads in a disk drive (which read, record or erase data to and from the disk) are sensitive to dust and dirt. They should be cleaned every two to three months using special cleaning diskettes. Check the operator's manual for the manufacturer's recommendations.

THE AVERAGE LIFE of a diskette is approximately 40 hours of use. Thus, it is important to make backup copies of working diskettes on a regular basis. Discard old diskettes. Don't wait until the diskette fails and you are no longer able to read the information stored on it.

READ THE MANUAL for your printer and become familiar with the machine care recommendations. Pay careful attention to the inking device - the ribbon or ribbon cartridge - as well as to the paper. Avoid hard-stike print settings as much as possible and use only the paper the manufacturer recommends. Make sure the paper is stacked properly and aligned correctly behind or under the printer to feed easily.

THE CONTRAST LEVEL on display units should be turned down when the monitor is not in use and set only at a comfortable viewing level while being used. Turning the intensity up all the way for an extended period of time can cause degradation in the quality of the display as well as visible burn marks on the phosphorcoated screen. Follow the manufacturer's recommendations.

SYSTEM RELIABILITY is improved by leaving the computer on during the entire normal working day. Turning on the power activates all the components of the computer with a sudden surge of power, and this should be done sparingly. Do not enclose equipment. The ventilating system should always face an open area where warm air can freely rise. Do not use household extension cords or multiple sockets. It is advisable to use only UL approved commercial adapters.

PORTABLE COMPUTER owners should remember that although the system looks like a piece of luggage, it is still a delicate piece of high-precision equipment and should be handled accordingly. Protect the system from excessive heat, cold and moisture. You can't go wrong by packing the system in Styrofoam to protect it against vibrations.

THIS ARTICLE APPEARED IN UNISPHERE MAGAZINE

"AND A BIT OF ADVICE. TELL YOUR BOSS TO QUIT FOOLING AROUND WITH IT!"

HOW TO REPAIR AN ELECTRONIC INSTRUMENT

STEP 1 - APPROACH THE AILING INSTRUMENT IN A CONFIDENT MANNER. THIS WILL GIVE THE INSTRUMENT THE MISTAKEN IDEA THAT YOU KNOW SOMETHING AND THAT YOU ARE NOT AFRAID OF IT. IT WILL ALSO IMPRESS ANYONE ELSE WHO HAPPENS TO BE LOOKING, AND IF THE INSTRUMENT SUDDENLY STARTS WORKING AGAIN, YOU WILL BE CREDITED WITH THE REPAIR.

STEP 2 - WAVE THE SERVICE MANUAL AT THE INSTRUMENT. THIS WILL MAKE IT ASSUME THAT YOU ARE AT LEAST FAMILIAR WITH THE SOURCE OF ALL KNOWLEDGE, AND STARTS THE INSTRUMENT TO THINKING THAT THERE IS EVEN THE SLIGHT POSSIBILTY THAT YOU CAN READ.

STEP 3 - IN A FORCEFUL AND DIRECT MANNER , RECITE OHMS LAW OR SOMETHING EQUALLY TECHNICAL - SOUNDING TO THE INSTRUMENT. (CAUTION: BEFORE TAKING THIS STEP, BE SURE TO CONSULT A RELIABLE SOURCE FOR THE CORRECT PRONUNCIATION OF OHMS LAW AND OTHER TECHNICAL WORDS.) THIS WILL INTIMIDATE THE INSTRUMENT AND PROVE THAT YOU INDEED DO KNOW SOMETHING. IF THIS PRODUCES NO IMMEDIATE REACTION, PROCEED TO STEP 4.

STEP 4 - JAR THE INSTRUMENT. THIS IS A PROGRESSIVE PROCEEDURE, STARTING WITH BOUNCING THE INSTRUMENT LIGHTLY ON THE BENCH, AND CULMINATING WITH DROPPING THE INSTRUMENT FROM A HEIGHT OF THREE TO SEVEN FEET (HIGHER IF THE INSTRUMENT IS PARTICULARLY FRAGILE). CAUTION MUST BE EXERCIZED HOWEVER; ALTHOUGH THE DROP METHOD IS A LONG-STANDING RECOGNIZED TECNIQUE OF INSTRUMENT REPAIR, ONE MUST BE CAREFUL NOT TO MAR THE FLOOR, OR THE CUSTODIAL STAFF WILL GET REALLY TICKED OFF AT YOU, IN WHICH CASE YOU ARE IN BIG TROUBLE.

STEP 5 - BRANDISH A LARGE SCREWDRIVER IN A MENACING MANNER. THIS WILL BADLY FRIGHTEN THE INSTRUMENT AND DEMONSTRATE YOUR INTIMATE KNOWLEDGE OF THE DEADLY SHORT CIRCUIT TECHNIQUE. TAP THE INSTRUMENT LIGHTLY WITH THE POINT OF THE SCREWDRIVER FOR SEVERAL SECONDS, JUST TO LET IT KNOW WHAT <u>COULD</u> HAPPEN IF IT FAILS TO WISE UP AND START WORKING.
IF THIS STILL FAILS TO ELICITE RESPONSE, PROCEED TO STEP 6.

STEP 6 - USING THE SCREWDRIVER, PRY THE BACK OFF THE INSTRUMENT (EVEN IF IT WAS DESIGNED TO OPEN FROM THE FRONT) AND EXPOSE THE INNARDS. CHOOSE A RANDOM LOCATION INSIDE AND STICK IN A TUBE - EVEN IF THE INSTRUMENT IS TOTALLY SOLID STATE. THIS WILL ACCOMPLISH TWO THINGS: IT WILL PROVE TO THOSE STANDING ABOUT WATCHING THAT YOU ARE INDEED INTIMATELY FAMILIAR WITH THE DESIGN, AND WILL ALSO CONFUSE THE INSTRUMENT GREATLY, THEREBY INCREASING YOUR PSYCHOLOGICAL ADVANTAGE.

STEP 7 - MAKE LOUD DISPARAGING REMARKS ABOUT THE DESIGNER OF THE INSTRUMENT, THE POOR QUALITY OF THE COMPONENTS, AND THE SLIPSHOD MANNER WITH WHICH IT WAS ASSEMBLED. USE LOTS OF EXPLETIVES. THIS MAY SERVE TO MAKE THE INSTRUMENT FEEL SUFFICENTLY GUILTY TO START WORKING AGAIN, OR GET IT SO ANGRY AT YOU THAT IT STARTS TO WORK JUST TO SPITE YOU. BE SURE TO KEEP A FINGER ON THE INSTRUMENT AT ALL TIMES, SO THAT IF IT DOES START TO WORK, YOU WILL GET THE CREDIT, RATHER THAN LOOK SILLY.

STEP 8 - IF ALL ELSE FAILS, MAKE VARIOUS COMMENTS ON HOW YOUR TIME IS MUCH TO VALUABLE TO WASTE ON THIS STUPID THING AND WALK AWAY, HOPING TO SNEAK OUT OF THE BUILDING BEFORE ANYONE ELSE SPOTS YOU.

CLEANING YOUR 99/4A INSIDE-OUT

By BOB DAGGITT

The following article is for owners of the TI 99/4A who may want to give cleaning their computers a try. Recently Ed Hegdahl and I decided to "clean up" Ed's computer because of reoccurring lockup problems. When putting in a cartridge, the computer would not even show it on the main menu screen, or if it did, when attempting to choose that option, the computer would lock up.

We grabbed my VCR and the Group's video tape of Al Stump demonstrating the cleaning process at the Chicago TI-Faire. The demonstration was great and easy to follow as we took Ed's computer apart and cleaned it. We deviated a little from the demo, but for the most part followed Mr. Stump step-by-step. Thanks Al!!!

I have tried to "break down" our steps and make this process and the process of replacing the power supply and keyboard relatively easy.

STEP ONE: Unhook the computer console from the power cable and video modulator and any other external accessories.

STEP TWO: Place the computer console on its top on a flat table with something soft under the computer to protect it from scratches. Set it down with the keyboard closest to you.

STEP THREE: Remove all the screws on the bottom of the computer. There should be three at the top and four at the bottom. Keep these screws together, there will be different sized ones later on.

STEP FOUR: Remove the ON/OFF switch knob located at the lower left of the computer by pulling it toward yourself. Now lift off the bottom cover and with something (Al suggests a 1-1/2 inch paint brush) and clean off all the dust visible.

STEP FIVE: With the bottom cover off, you should see the same as in Figure 1A. Also take note of the ON/OFF switch knob plate and remember how it is placed.

STEP SIX: CAREFULLY remove the two screws on the power supply that are marked in Figure 1A like this >. Keep these screws together.

(Continued On Page 3)

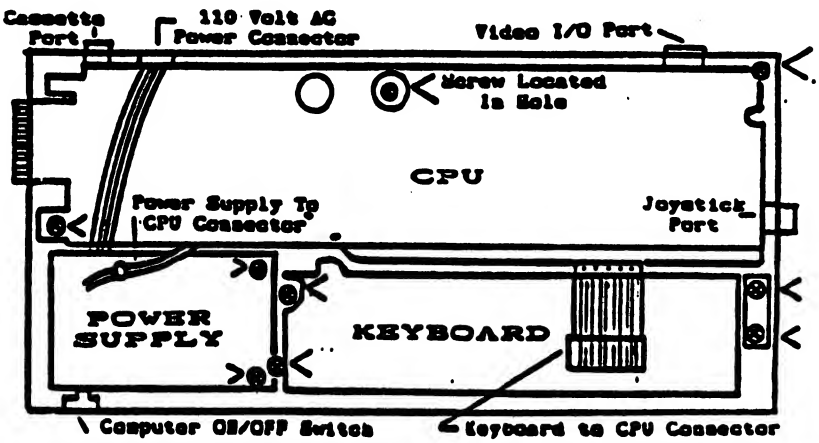

FIGURE 1A

CLEANING YOUR 99/4A INSIDE OUT...(Continued From Page 2)

STEP SEVEN: The power supply should lift right up, then remove the connector on the power supply that goes to the CPU (four prong white connector). The white connector has a push-in tab to release it.

STEP EIGHT: Now unscrew the three screws marked < in Figure 1A from the CPU (also keeping these screws separate). Gently lift up the CPU until you see the keyboard connector wires. Then carefully remove the connector by gently wiggling it back and forth with an outward pulling pressure.

STEP NINE: Turn the CPU over and you should see something like Fig. 1B. The main component to worry about is the cartridge port. This is what the cartridges are plugged in and out of. Remove it by pulling up gently while wiggling it from side to side, it should whip right out.

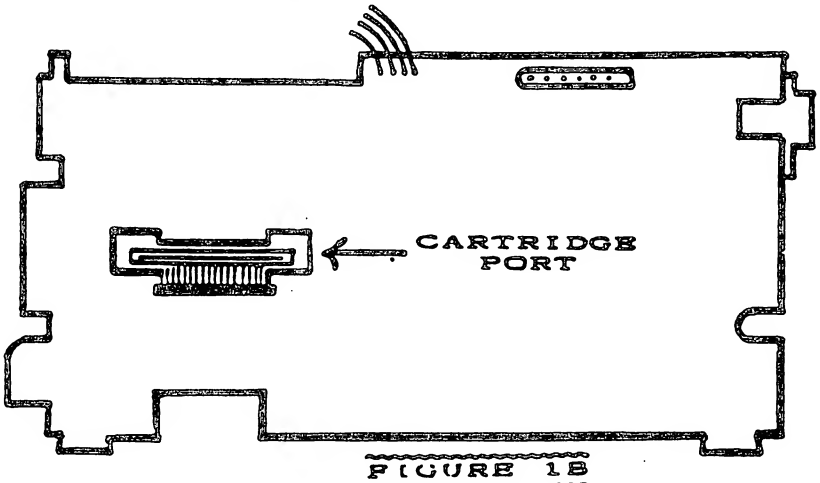

FIGURE 1B

STEP TEN: With isopropyl alcohol and a lint-free cloth, clean off the contacts that actually go into the CPU. Next remove the cover of the cartridge port (see FIG. 2B on how to remove it) and clean. With a lint-free cloth and a flat edge push the cloth into the connector, then pour just a little alcohol onto the cloth, let it sit for a minute, then remove the cloth. Repeat this process until the dirt no longer accumulates on the cloth. Do the same for the contacts on the CPU itself.

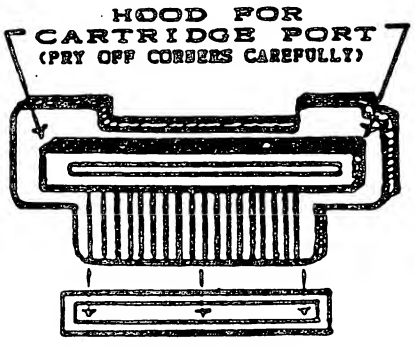

FIGURE 2B

STEP ELEVEN: Now that you have everything cleaned up, this is a good time to replace the keyboard, if you want. Four screws hold it in, remove those as marked in FIG. 1A and the old keyboard will slip right out, and the new one right in. Sometimes the cartridge strip holder on the top of the keyboard could be loose. I have found that usually a pull will remove it and under it is usually tape. Remove the worn-out tape and just stick the strip holder back on. If you decide not to replace the keyboard, just reverse the above steps and put everything back together.

(Continued On Page 4)

CLEANING YOUR 99/4A INSIDE OUT...(Continued From Page 3)

STEP TWELVE: If you are having trouble with your computer and you think it might need a cleaning and you don't want to go through the easy-to-follow-steps I have provided, just contact me at 361-6019 and I will do it for you. I will also replace the keyboard and power supply (it's recommended the power supply be replaced because of the better quality ones available now) for the meager sum of $10 for the works -- I provide the power supply, you supply the keyboard.

AFTERWORD: Thanks to Ed Hegdahl who volunteered his computer to be my first "victim", Doug Daggitt who was the first to try this article and then pointed out any mistakes, and finally thanks to Al Stump and the Chicago Users Group who made our clean consoles possible.

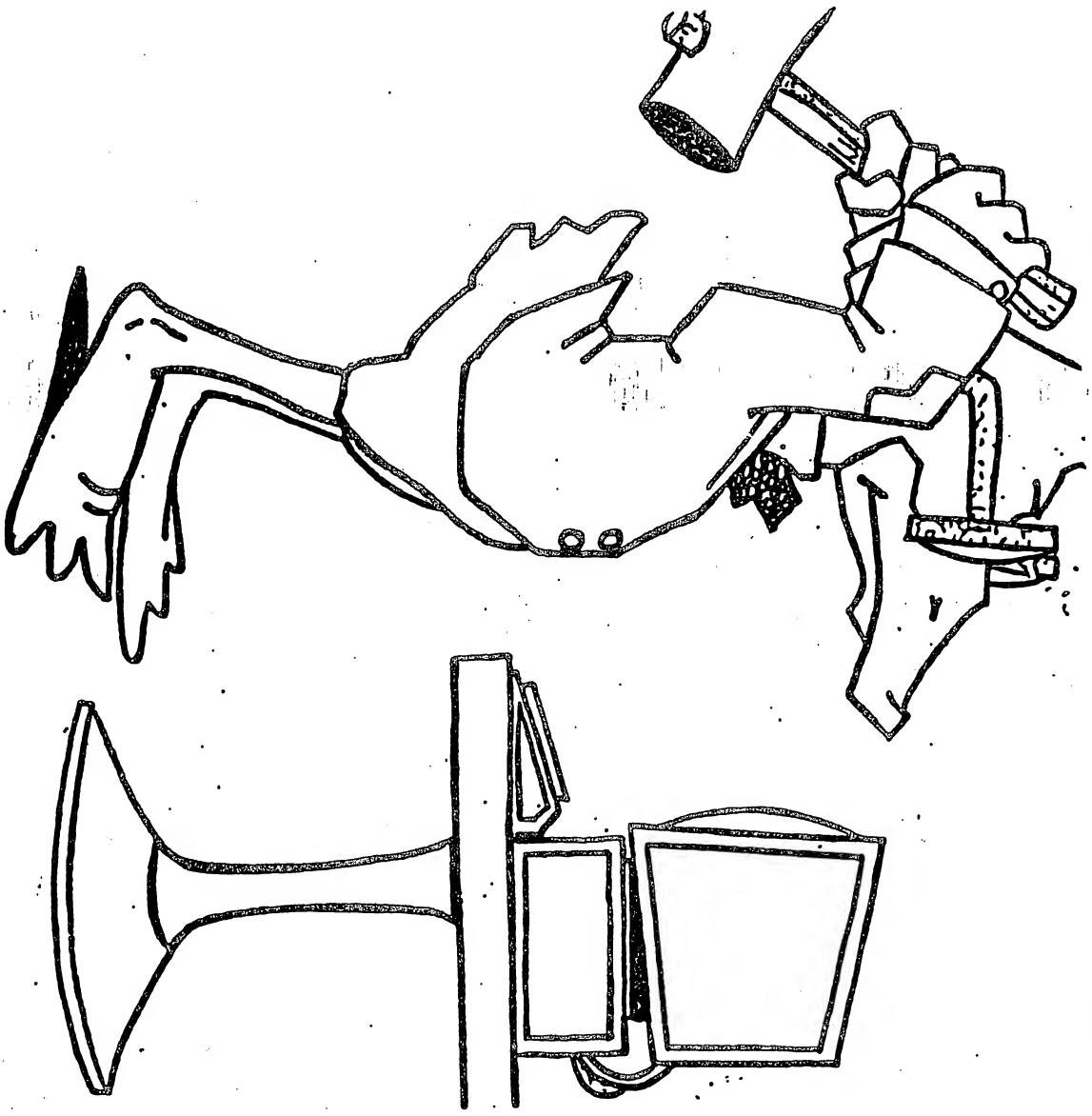

CURE FOR LOCK-UP on the TI-99/4A
By DOUG THOMAS

The following article was taken from the January 1984 issue of SOFTEX, an Australian User Group publication.

There is nothing more exasperating than to have spent time typing in data or a program into the computer when it suddenly "Locks-up". When a computer really begins to foul up you will find it almost impossible to load Extended Basic (this module uses more pins than most) and the computer will "die" at any time. The only thing left to do is to switch off and start again.

Initially , oily build-ups, static, and various other causes were thought to be the cause for this. While they can and do at times cause lock-ups, this is not the reason for persistent problems in this area.

Well, I'm pleased to say that there is a cure, for what is essentially a design problem. The main culprit is the Module port, which is not rigidly supported inside the computer, and with regular use the contact plug moves and breaks a perfect contact, causing lock-ups.

The method reported here does cure the lock-up, as I've had to use it on my computer, which reached a stage where it became almost impossible to use. If your computer iss under warranty, then take it back to TI to correct, but if not then try the following with the understanding that Softex P/L takes no responsibility for any damage caused while undertaking this. It appears some computers are more susceptible than others, I guess the main precaution to take is to always take out and put new modules in carefully, as if roughly handled then there is a chance of movement being caused.

The cure can be made within a 15 minute period, with the only tools being required are a small Phillips head screwdriver and a sharp fine pointed knife. If you have some circuit board cleaner handy, then this could be used to clean the contacts, rather than burring them slightly with the knife, which gives a better contact. In the course of this exercise you can see how your computer was put together, although you do not uncover the main circuitry. Use the photographs accompanying this article to guide you along with the following detailed steps.

1. Unplug your computer, and take it over to a table or bench that has been covered with a blanket or other non-scratching material. Place the computer upside down, with the front edge (thin edge) facing you.

2. Next, find the 7 retaining screws that hold the case together, 4 along the front and 3 imbedded at the rear. Take a small Phillips head screwdriver and remove these screws, being careful not to lose them or place them where they can be mixed up with others removed later.

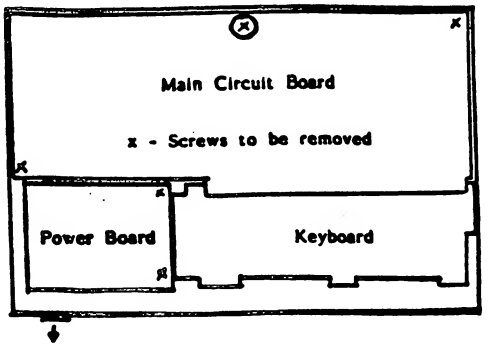

Diagram showing screws to be removed.

3. Gently pull the On/Off slide switch out by pulling it toward you, then place this down where it will not get lost.

4. Carefully begin lifting the bottom of the computer case off, exposing the insides. Take careful note where everything is situated, as this is how it is to look before you put it all back together. Take note particularly of the 4 wires running from the power plug to the circuit board exposed on the bottom left corner (power supply board). Photograph No. 1 shows you what you will find on removing the cover, but note that the wires going across the silver metal shielding on the main circuit board should be further to the left.

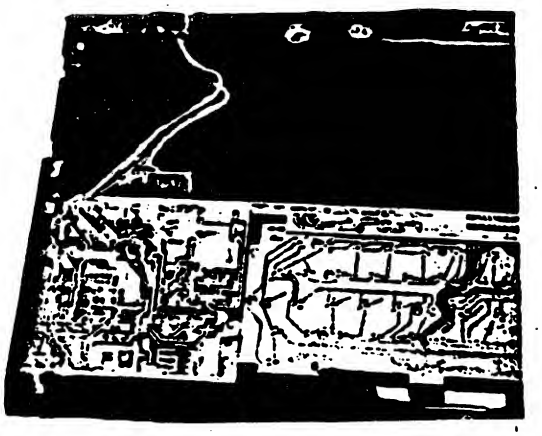

Photo 1.-View showing exposed Circuit Boards

5. Lift the wires and power socket and place on the left side of the console. Note how the socket sits in place.

6. Locate the 2 screws on the right side of the power circuit board, (see sketch) and remove them. Carefully lift up this board, noting the 2 locating pins (plastic), and place the board to the front and left of the main circuit board (see photograph No. 2).

Photo 2.-Power Board removed

7. Locate the 3 screws to be removed from the main circuit board (covered in metal shielding) from the sketch, and remove.

8. Next, lift this board up, hanging on to the shielding, carefully noting the locating plastic pins, and turn this up to expose the underneath as shown in photograph No. 3. You will see a small circuit board with a plug attached (Module socket), which is the cause of all your problems.

Photo 3.-Module Socket connected to main circuit Board

9. Take hold on both sides of the circuit board and gently pry this out of the socket going into the shielding. After removing this, lay the shielded board down again approximately in its old position.

10. Now you have the culprit in your hands, this being shown in photograph No. 4, lying on the keyboard circuit board. The main cause of problems is bad contacts between the circuit board and the socket in the main circuit board. These contacts should be cleaned with the circuit board cleaner or carefully using a fine pointed knife where the surface of the 36 contacts should be scraped BUT only in the center and not across the whole surface or there is a danger of lifting the tracks. The idea of scraping is to burr the edge slightly so that on reassembly better contact will be assured. Those with circuit board cleaner can scrub the surface clean.

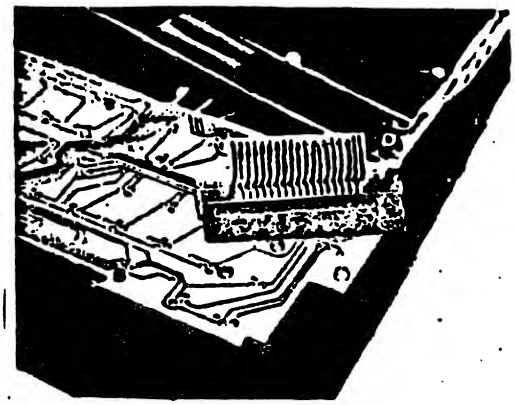

Photo 4.-Module Socket on Keyboard

11. Next, use a fine knife point with a piece of rag wrapped around it and then rub this into the socket attached to the circuit board. You will probably find the rag covered in black from the dirt introduced by your modules. After cleaning this socket, you are ready to reassemble your computer.

12. Replace the socket, making sure it is firmly home and the metal guide on the other side is properly seated.

13. Carefully refit the main circuit board over the locating pins, and replace the 3 screws.

14. Refit the power board similarly, being careful that the wires underneath are not restricted.

15. Now carefully route the power cord and plug across the metal shielding and make sure this is sitting flat. Use a piece of tape if it will not stay in place. Make sure the wire does not restrict the peripheral socket and does not protrude higher than necessary, as the backing will not sit in place.

16. Fit the back cover over again, and when you have it sitting correctly, refit the 7 screws.

17. Push the slide switch back into its proper place and then check that you have no screws or parts left over.

18. Reset your computer up again and switch on and you should be rewarded with lock-up free operation again.

Hopefully the above will be the last problem you experience with the "lock-up", but if it re-occurs again after further use, then repeat the above. I personally have experienced the problem 3 times now, the first time TI repaired the computer, with myself carrying out the above procedure twice since. Several months of heavy use took place between these occurances, but I'm beginning to think of sending away for one of those "Widgit's" made by Navarone Industries to lessen the chance of module changing causing problems in the future. I must also emphasize that over 3 years this has been the only problem I have experienced with the 99/4 and 99/4A computers.

Don't be frightened to carry out the above procedure if you do have lock-up problems, as I can assure you it is heaven to have reliability.

Lock-ups are a fairly common problem experienced with the TI-99/4A's and we would appreciate a note of your experiences with this.

XXXXXXXXXXXXXXXXXXX

It is now October, and Thanksgiving has been and passed. I wonder if we have anything to be thankful for? Supposedly the new trade agreement will be accepted. Then, perhaps, we will have access to other sources of hardware, that will be cheaper? At least we won't have extra charges tacked on our U.S. purchases, such as the one I paid recently for an AMIGA 1080 MONITOR.

No, I'm not going AMIGA. The monitor has all that we need. If the indication is valid, from 9640 owners, we will all go to this monitor, due to the fact that we can use it with composite (RCA plugs) and RGB ANALOG, and TTL with sound. I am using it now, to read and run any program that I have. Let me tell you, it is nice to get, what others are used to, in the TI-Monitor. Super Steady Video, with no wave action across the screen, as I had, with a TV hookup. In the future, I will have the RGB going, with the standard TI console, with the help of the 9928 VDP chip. Or, how about the Digit Systems 80 column interface. Yes we can get 80 columns, with all 192K Video Chip, the Yamaha 9938 chip, that the Geneve 9640 uses. To work with our standard console. Perhaps, the Ballmann 32k, will be the Ballmann 64k in the console, when they find the right decoders to do it. If the TI world goes, the way I suspect it will. There will be us, who stay with the standard, (altered) console, with the 64k modification in the console, and those of us, who go Myarc 9640, or its' decendant?! I say, decendant, due to the statements in the Harrisburg Fair review. We have access to all the latest news, due to downloads from the GEnie network. The Harrisburg PA review indicated from the a sales rep. from Myarc, that they have another computer in the wings, to be sprung at the next Comdex computer show. I believe this is in Las Vegas, at the beginning of the year?! The Myarc DOS system is going through the Genisis stage, which is a fine example to us, the end-users, being able to watch a system develop before our eyes. True, it is painful, if you have the direct first-hand drama, as I have seen unfold, via news on the GEnie, from detractors, who complain about it, or the actual developers of the software, who have first hand knowledge and release the various versions of the system operations. Such as the DOS, or the versions of the Word Processors, Spreadsheets, and Art Works coming. Micropendium lays it all out, in their latest issue. They don't criticize, just report. We have to be thankful to be the witnesses of it. Where else, in computerland, would we be able to see it. If we look, we will see what no other end-user of any other computer, would or will ever see! Perhaps you don't appreciate this. Well think about it! The other computers such as Atari 1040st, or the Amiga, and lately, the IBM PS/2 have gone through, or are going through the very throws of development, that the GENEVE 9640 is going through, right now.

Speaking of painful transitions, I've got my 64k Radio-Electronics Alpha Buffer going. Whoopee! Ron Zakariesen gave it the final blessing, since it was he who figured out that that damned chip in the cable to my Okimate 20 printer, needed power. "Elimentary", as Holms would say. I really did do most of the work on it, with help from Don Smythe, who kept the vigilence of equipment in the right order. Me, I did the board drilling and the soldering, and the logistics of finding sources of where to get mylar drawings made, or chips. It cost about 65 CDN$, but not including the Auget socket pins or mounting box or switches. It would have been simpler to have a Ram Card, instead. However we started this before all those Ram Cards where around. I just have a place to dump 62.?K of output, independent of Ram Cards or Computer! When I get a Ram Card, I will still get my computer back a little faster, yes? Anyway, I learned a lot, which is the most important?

Next thing to tackle is the RGB converter, or Imagewise (Steve Ciarcia's) Digitizer. Steve Langguth has this Digitizer working with the TI-99/4A.

The RGB converter is no longer made by TI. Does anyone know of a company that does. It is called a EVM-RGBCNV-01. Which Steve Schmitt supplied the Application Report and Schematics. His article in Ryte-Data, is for TTL only, and does not intend to make boards or build the ANALOG version. He said, to me, on the phone, that the ANALOG version is cheaper and easier than his TTL version?! And, get this, the TTL loses colors. Anybody - Interested?

Don Campbell collected the Ann Rhein article from the Chicago Users - Newsletters, on how to output pictures through the Formatter of TI-Writer. It is included with the Club circulation of this newsletter. Gary Snow has collected a list of other club newsletters, into a reliable list. Seems the other clubs, including software makers, such as QS, are interested in receiving a monthly copy? There are 24 on the list, some CDNs, mostly U.S. I Wonder how we gathered so many "other" fans. Can't be that we have too much to contribute. Maybe we contribute to the lifeblood of our computers? A sort of assistance in the pulse of it?

If you are at all interested in the club, the minimum you should do is get a modem. This is a whole new world. Our club BBS has enough capacity to Upload and Download. Our main Sysop is ready to make available any fairware, or public domain piece of software!! Believe me, there are piles of 'em. A lot, of course, is downloaded from the GEnie. We have about 4-5 accessible members of the GEnie, who contribute to our BBS. So why anguish, on your own, or wait for monthly meetings. GET MODEMING!!

Dave Lovering
Calgary 99ers

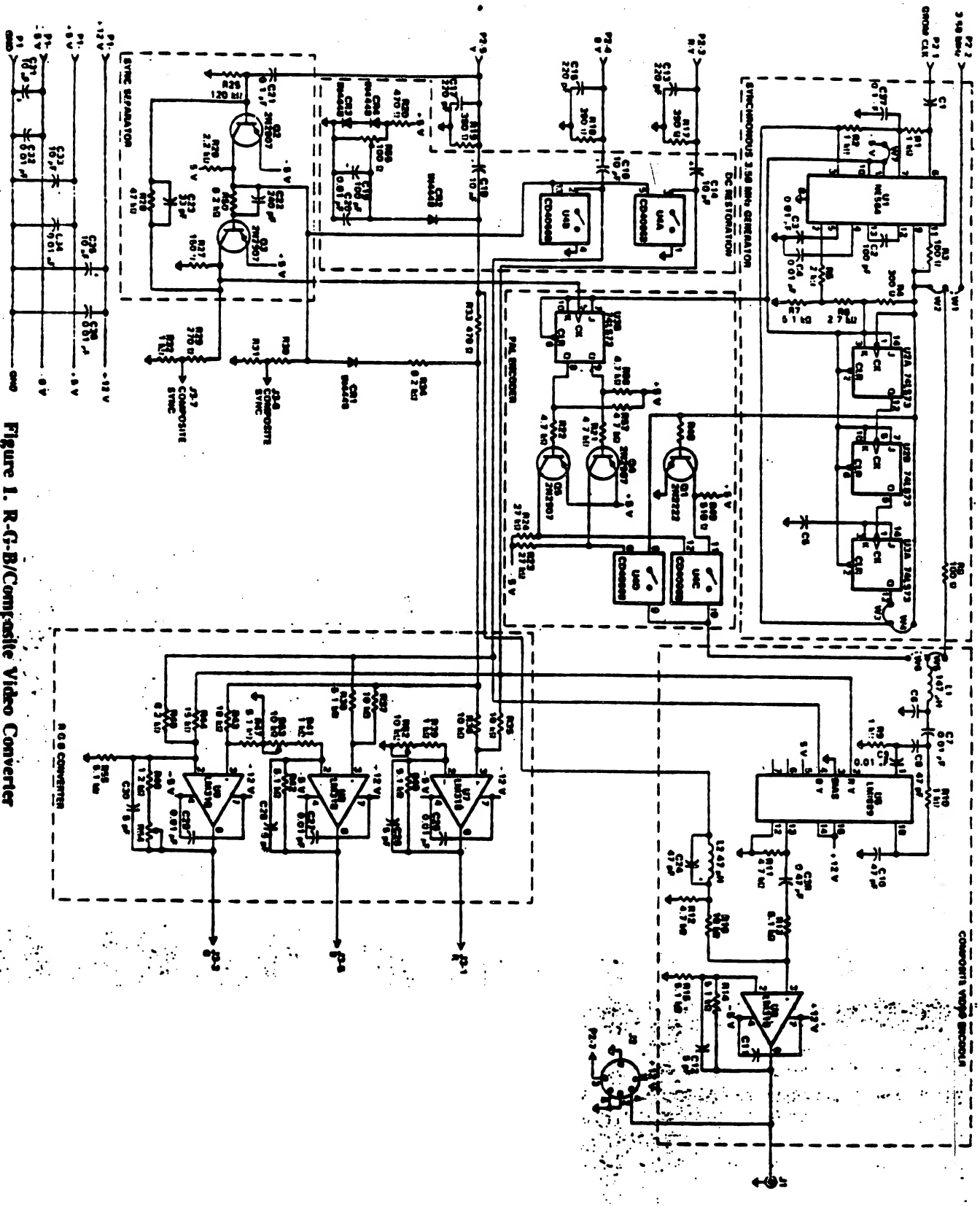

Figure 1. R-G-B/Composite Video Converter

BACKGROUND NOISE
with the R.F. Modulator

When experiencing background noise, such as humming or buzzing, with the R. F. Modulator, internal adjustment in the Modulator will usually alleviate the problem. This can be accomplished by the user by following the steps below and referencing the illustration below. This procedure is to be done while all equipment is on and operating. If you have the old version of the TI900 Video Modulator, this procedure does not apply.

Materials required: one small, flat, thin-bladed screwdriver

To correct the noise difficulty:

1) Turn the volume of the television all the way down, but do not turn it off;

2) Select the Master Title Screen on the computer (FCTN=, if necessary);

3) Using the title screen color grid, fine tune the television to the best color picture;

4) With the screwdriver, pry off the lid of the Modulator box by lifting under one edge of the lid neat the indentions holding it on;

5) Lift off the lid and turn the television volume up to half (50%);

6) Insert the blade of the screwdriver into the slot of the small box labelled CVI (see fig.) and turn it slightly until the background noise is at a minimum (should take less that 1/8th of a turn);

7) After bending the Modulator lid edge back into place, put it back over the Modulator box and press it firmly into place until it snaps.

The system is now ready for optimum usage.

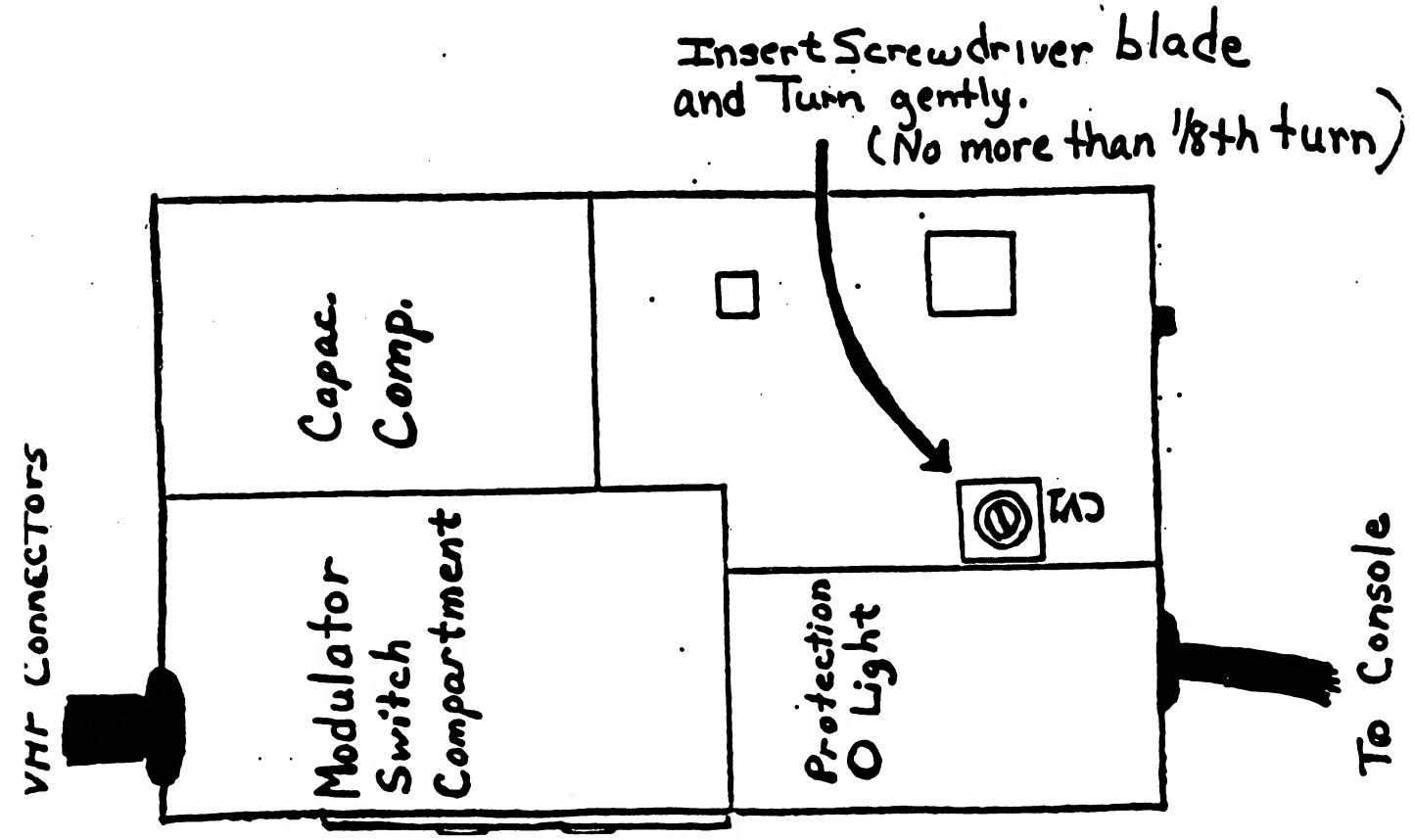

VIDEO MONITOR FOR YOUR T.I.
by Rich Rehfeldt

So you want to put a Video Monitor on your T.I.
Now you know you don't need the modulator anymore at this time.

Parts that you will need:
1 Plug R.S. 274-005 5 Pin Din or Equal
2 RCA Phono Plugs R.S. 274-339 or Equal See Note*
1 Roll of shield wire R.S. 278-751 or Equal
1 gave Radio Shack Part Numbers for your convenience. or use any type want or can get.

Step-1 Cut shield wire to length you need two equal pieces to go from the computer to the monitor.
Step-2 Solder RCA connector, one to each length of shielded wire. Do not short connector.
Step-3 Connect center conductor of one piece of cable to Pin 4. This is Video.
Step-4 Connect center conductor of other piece of cable Pine 3. this is sound.
Step-5 Connect the shield of both cables to Pin 2. This is return.

Notes
Be sure the shielded wire and connectors do not have any shorts.
* This type of connector might vary with the type of monitor that you may have.

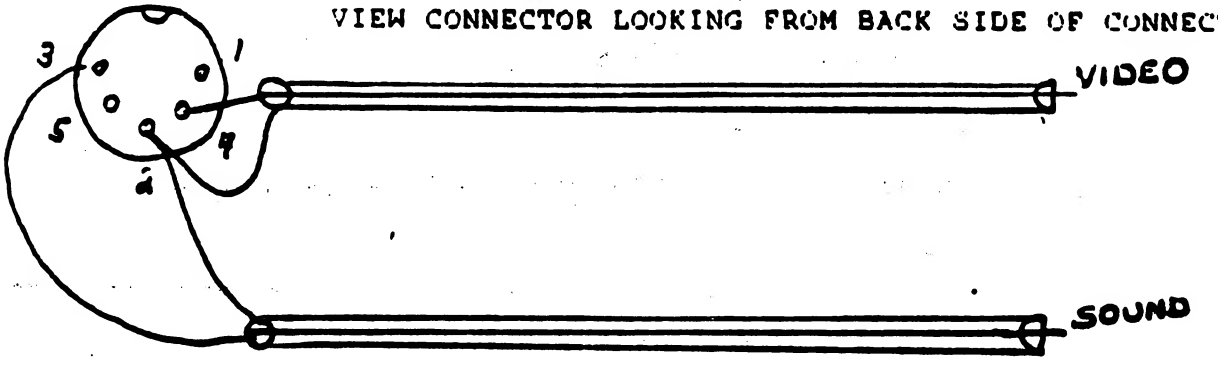

CRY ! I just read in the CHICAGO USERS GROUP's newsletter the CHICAGO TIMES, October edition, where the membership chairman apologized to the group for members having to wait in line so long to renew their membership ! (We should be so lucky.)

LAUGH ! It's time to go now. But before I do, let me leave you with the immortal words of no one in particular, who might have said: "If you miss one issue of a magazine, it will be the one with the article you most wanted to read." (Does not apply to this publication.)

"BYE"ta for now !

BUILD YOUR OWN DUAL CASSETTE CABLE
by Rich Renth

Here is wireing for a TI Dual Cassette Cable, if you are in the building mood again. If you want a single cassette leave out # cable.

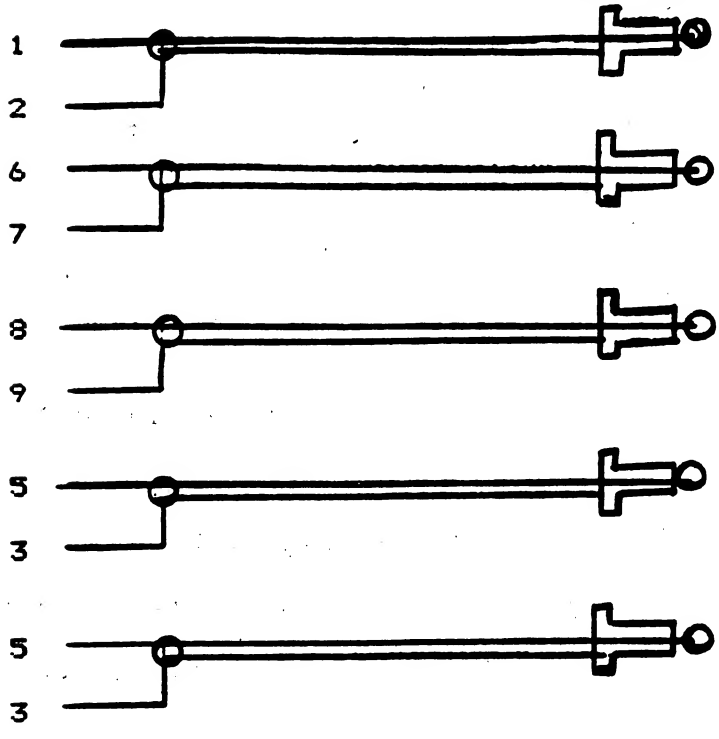

2 RED - RS 274-287 MINI PLUG

3 BLACK - RS 274-287 MINE PLUG

2 BLACK - RS 274-289 3/32 SUBMINI PLUG

1 9PIN FEMALE RS 276-1538 D TYPE

1 HOOD RS 276-1539

1 MINIATURE WITH SPIRAL WRAP SHIELD RS-278-752

---

* * * * * * COLOR BLEND * * * * * *

If you want pastel colors in your programs, make every other dot in your CHAR a one or a zero and then call the background color to be white (16). The program below will change the cyan color to a pastel shade

```
90 CALL SCREEN(16)
100 CALL COLOR(1,8,16)
110 CALL CHAR(32,"55AA55AA55AA55AA")
120 CALL CLEAR
130 GOTO 130
```

Try also 14, 12, 10, and 2 as the second number in line 100 for othe. colors. John Johnson, (Cedar Valey 99'ers Users Group)

GREEN MONITOR BLUES
COLOUR KILLER FOR THE TI-99/4A

BY PAUL LANOIE / RICHARD BAILEY NH99ER USER GROUP

Announcing the COLOUR KILLER FOR THE TI-99/4A, a hardware modification for the console, that will let you select colour or, black and white output from the TI-99/4A.

This modification adds a capacitor and a switch to your console, (cheap and easy). One switch position yields a normal colour output from your console, the other yields an output that has no colour. Connect the console to a colour T.V. with the switch with the switch in this position and you will see a black and white picture. Connect to a monochrome monitor and you will see the picture that I've been after all along! a nice display with different levels of brightness representing the range of colours. And best of all, you still have the sharpness and resolution available from a monitor in display text.

A technical explaination. First let me say that both Bailey and I consider the workings of a television to be in the realm of "magic". However some very persistent research has led to the following conclusion. The Video Display Processor in the concole puts out what is called a "composite video" signal to your monitor, or your R.F. modulator if your are using a T.V. This signal, when in colour, contains what is called the "colour burst". When the signal is black and white the "colour burst" is not present. So then the object of the hardware modification is to get rid of the colour burst portion of the "Composite Video" signal.

Now pick up your Radio Shack electronics data book (RS#62-2040), and you will find out that the colour burst portion of "Composite Video" is a signal with a frequency of 3.579545 MHZ. Go to the schematic of the TI-99/4A and see that the output of the VDP (9918A) is on pin 36. Connected to pin 36 is an item called L202. This is an induction coil, often called a choke. What you do is add a 100 PF capacitor in parallel with this choke. The result is a tuned circuit that will kill the 3.579545 MHZ portion of the video signal. Put a switch on the back of you console in series with the added capacitor, and you will now have a switch selectable "Colour Burst Filter".

The sketches for this change are shown here, the schematic on the left and the pictorial of the right-rear corner of the main circuit board on the right. By the way, the cost of this modification is about 70 cents for the capacitor (Radio Shack 272-152), plus $1.69 for the switch (Radio Shack 275-152 or 275-613).

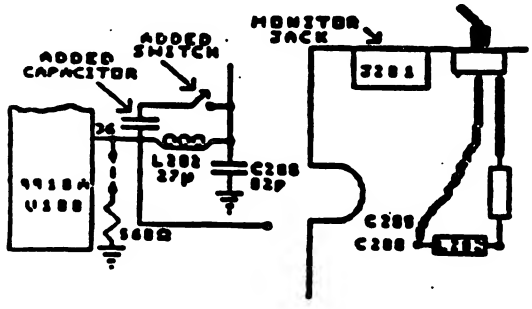

Copied from OttAWA U.G.

Sept. 1986

JOYSTICK/ALPHA LOCK KEY FIX

This project has appeared in numerous new letters and publications. By adding diode the ALPHA LOCK key will no ger interfere with the joystick UP ction. I read a newsletter article re one person complained that his PHA LOCK key didn't function properly ter the modification but he must have de an error in installation. I have ified two consoles; one on the yboard and the other on the main board d both work perfectly. It is very easy do.

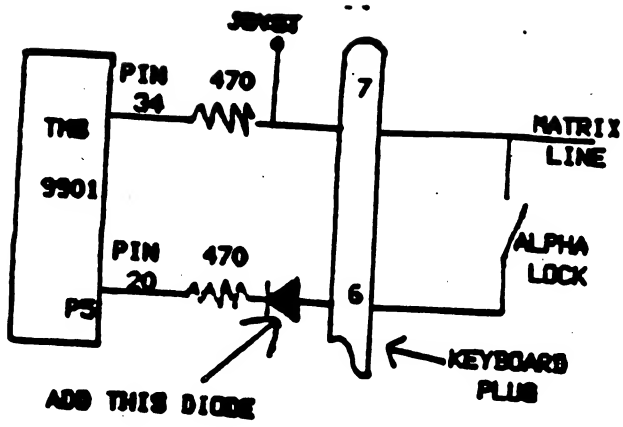

Improved Video

by, Bob Lawson

In my travels through the Texas Instruments Manuals, specifically the TMS-9918,28,29 Manual, I read,"The load resistor (RL, pin 36 to ground) defines the sharpness of the edges on the video signals. A lower resistor value gives faster fall times and a sharper picture." Hmmm! I don't remember any 330 ohm resistors.

Well, I pulled out the "TI Console and Peripheral Manual, and sure enough, R212 pin 36 to ground was 560 ohms per the schematic. The next step was to check out a console, and well you guessed it, R212 was 560 ohms, not 330 ohms as recommended in the TI Manual!

Next step was to try some different value resistors, 330 ohms seems to be about the best common value resistor to use. I wonder why TI chose to use 560 ohms. I did find one old TI Manual which recommended 390 ohms (1979), but they're sometimes hard to find in 1/4 watt. This 30 cent change gives about a 40%, that's right, I said 40% improvement in the picture. The improvement is so good, you'll wonder where the WHITE SHADOWS WENT.

EDITOR'S NOTE: Some of you may become confused by the designation " R212 pin 326 to ground", in the second paragraph above.

There are always differences between the hardware you are using and the schematics that you are referencing. Bob is giving you the most commonly used console layout in the drawing to the right. If your console does not match, follow the pin 36 from the VDP chip, through two devices called inductors to the resistor to ground. Replace that resistor with a 330 ohm resistor.

J.F.W. (West Penn 99'ers)

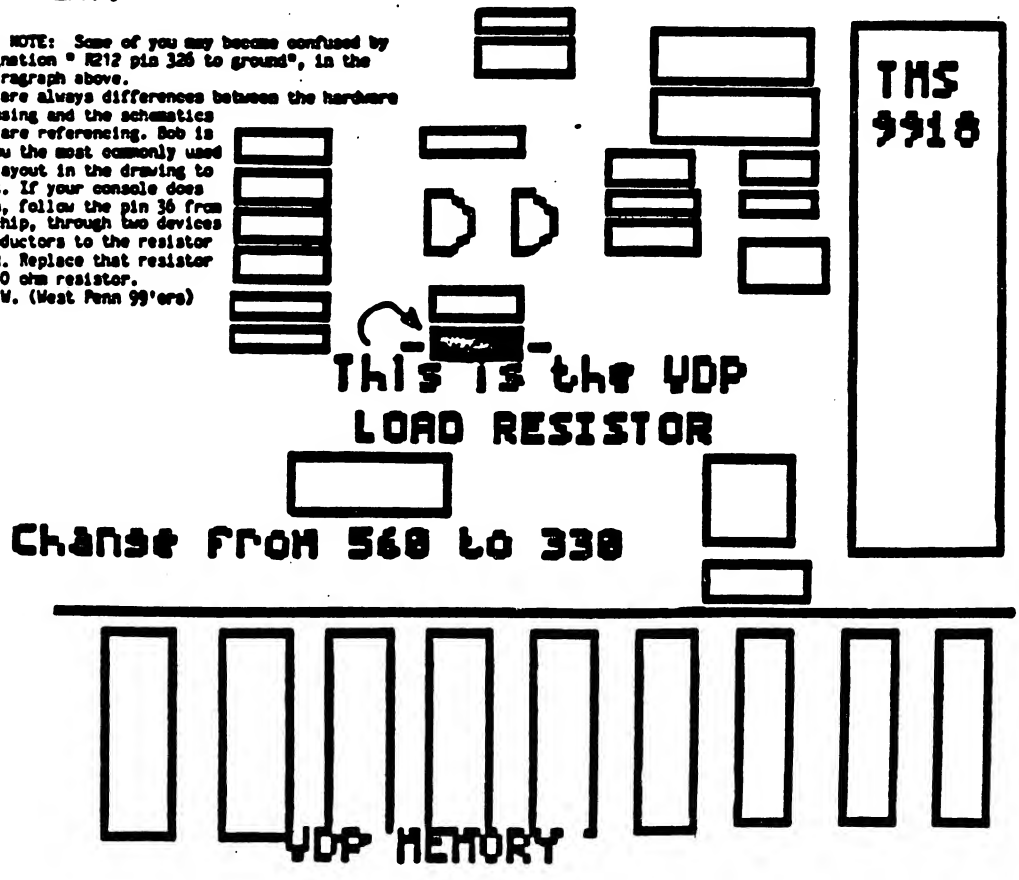

TOMY CONTROLLERS

by JAMES P. DONOVAN
BLUEGRASS 99 COMPUTER SOCIETY, INC.

The Tomy Tutor computer was discontinued several years ago. Fortunately this computer used the 9900 microprocessor and was based on TI Extended BASIC. Although not totally compatible, the two systems are very similar. Recently the Zayre stores in Louisville, KY have started selling the Tomy computer, modules, and the Joy Controllers. The modules will not work with the TI directly!

I purchased a set of Joy Controllers for $4.99 at Zayre, and they are very similar to TI in wiring. These controllers use the control disk operated by your thumb, similar to the Intellivision Games controllers. A male and a female DB-9 connector, and seven small pieces of wire are all that is necessary to convert the Tomy controllers to TI. The wiring is as follows:

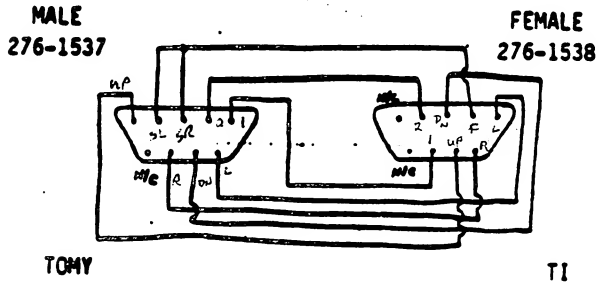

The Tomy controllers have two fire buttons, SL and SR, on each controller. I wired the unit so both fire buttons on each controller operate. The controllers actually use snap switches and, like the TI, also have eight positions. The Tomy controllers have a more sensitive feel than the TI controllers, and I think they provide a good replacement for the TI, once one gets accustomed to the thumb control.

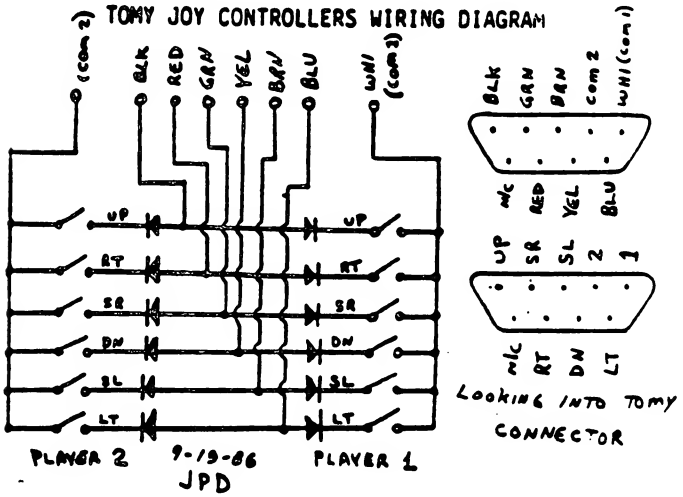

the following article is from the Airport area computer club. Coraopolis, Pennsylvania

TRAKBALL FOR THE TI: I was wandering through the local HILLS store when I found that they had ATARI trakballs for under $10.00. Not being able to pass up a bargain, I bought one to see how well it would work with the TI. The stores may not have any left by now, but I thought I would pass along what I found out

I got the trakball controller home and plugged it into my adapter for ATARI type joysticks and found that it did not work. Not willing to give up without a fight, I removed the screws on the bottom of the controller and carefully pried the case apart. There are two posts in the bottom of the case that fit into the top half that make getting the case apart a little difficult, but not impossible. I was very impressed with the construction of the controller internals. It uses two slotted wheels with optical sensors to determine direction, one for up-down, and one for left-right. There were also several integrated circuits, resistors, and capicitors on a printed circuit board. Seeing all these components, I knew why the thing didn't work - the TI does not supply the power to make it run. One call to a friend with an ATARI type game and I learned that the controller should be supplied with 5 volts. Since I had a spare 9 volt DC calculator supply around the house, I decided to use that. After a trip to buy a 5 volt regulator (7805), 220 mfd capacitor, a miniature jack, and a couple of diodes (1N4001), I built the following circuit:

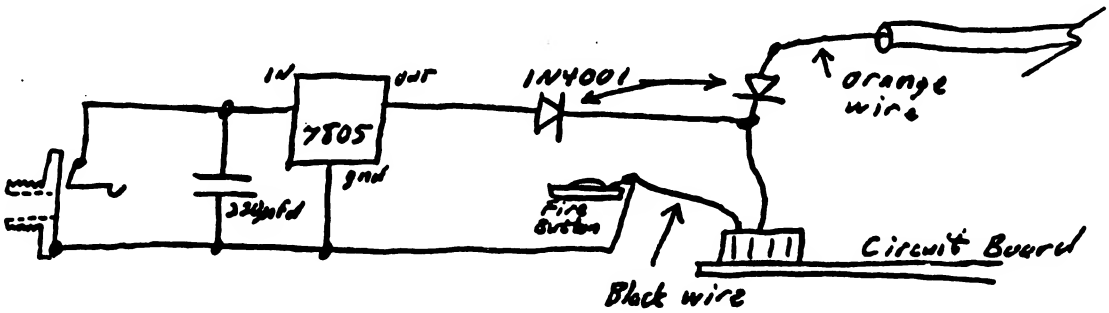

I installed the jack in the lower part of the case and wired the components directly to it. The power wire is the orange wire in the joystick cable. I soldered the ground wire to the black wire at one of the fire buttons.

As for the usefullness of this controller; I found it works well with ATARI's CENTIPEDE, and I had some success with MOONSWEEPER. Don't even consider using it with a game that freezes up if a diagonal is chosen, such as PARSEC. The results are that you will surely lose a ship. One last thing, the controller has a switch marked TRAKBALL/JOYSTICK. Use it in the JOYSTICK position, as the instructions indicate for using it with most of the ATARI games.

BILL GRONOS ?

We received a letter from Bill In Spain... specifically on a bus ride over (obviously) poor terrain to Madrid. Sounds like our article is delayed to next issue. His duties are demanding 16 hours a day to problem shoot some equipment problems.

I suppose that, with the time lag overseas means we'll see some more great material, later.

Hold tight, he hasn't disappeared.

INCENTIVE PRODUCT DRAW

(outright bribery time)

During the next 90 days, until November 21st, after the Chicago Users Group TI FAIRE, we are conducting a subscriber "incentive" promotion:

The product give away is open to all TI 99/4A owners - two classes of prizes will be offered. For entrants who send in their name and address on a postcard marked "99/4A INCENTIVE", we will be giving away the following products: your choice of-

1. Navarone 'Widget' Cartridge Expander
2. StarShip Pegasus by Not-Polyoptics (cassette Basic)
3. Night Mission by Millers Graphics (cassette Extended Basic)
4. Microsurgeon (TI module)

For subscribers to R/D COMPUTING the draw will include your choice of:

1. Extended Basic II plus (high resolution module)
2. 32k Memory Expansion unit
3. GPL Assembler Package with INTERN and GPL Linker (32k/disk)
4. MiniMemory Programming Module
5. Super Clock Support, INTERN book and Basic Compiler (disk)
6. Lifetime subscription w/ disk to R/D COMPUTING.

Something for everyone! No purchase is required to enter the draw. Send in your name and address on a postcard, stating your choice of product. The draw is open to all TI 99/4A owners, subscribers and users groups. REMEMBER, our promotional draw closes November 25th, 1986. Winners names will be published in the December 1986 issue. Please pass the word along to your friends, your user group and any other 99 owners!

DO IT TODAY!

- by Mark G. Webb

Atari to TI-99/4a Joy-stick Conversion

Here is a way to use that old joystick that has been under foot since your Atari game system was superceded by your TI.

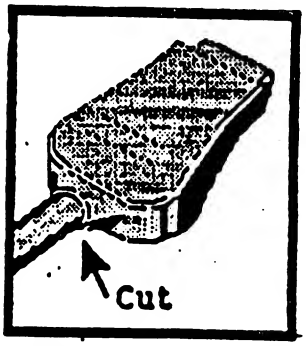

Cut the cable as close to the plug as possible to keep as much length as possible.

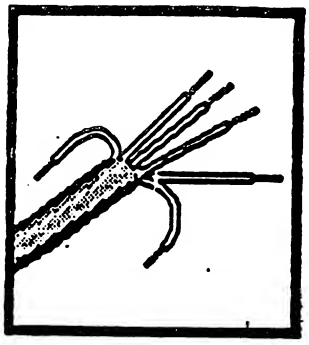

Trim back the outer insulation 3/4 to 7/8 of an inch. Then trim back the insulation on each wire 3/16 of an inch.

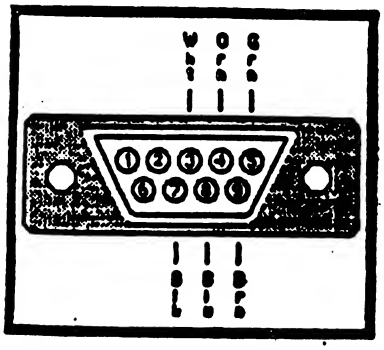

Tin the wire tips and solder in the following manner:

White to pin 3 Black to pin 7
Orange to pin 4 Blue to pin 8
Green to pin 5 Brown to pin 9

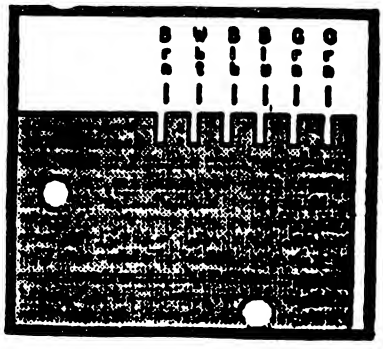

It is not necessary to open the joystick to complete the process but if you do these are the wire connections on the board inside.

BURGLAR ALARM

The program listed allows you to use your spare TI console as a burglar alarm with very little investment except for a bit of time.

The actual program is very simple and can be modified to suit your own particular needs. This particular version has a lot of statements that allow you to see what is going on in the program while running a demonstration, however they can be removed quite easily with no effect on the operation of th program. Just a few cautions though. Understand the program first before maki any drastic changes. The other precaution is not to use your perimeter loop or the same joystick "direction" as the entry keyswitch.(eg. if you use the UP position for the keyswitch do not use this direction for the perimeter loop even if it is opposite joysticks) The program is set to use the UP position o joystick 2 for the entry keyswitch and the DOWN position of joystick 1 for th perimeter loop. It is also possible to use the other joystick directions(with appropiate program mods) to have more than one loop. Remember, this program will run as a standalone routine but is intended to be modified or totally rewritten by yourself to suit your particular job. The intention of this program was to be as simple as possible and not require any peripherals or modules. Most of us have a second console so here is a good use for it other than a paper weight.

To set up the alarm you will need the following:

1. TI console
2. Normally open magnetic or pushbutton switches for each door on the perimeter loop.(Radio Shack #49-495 or #49-497) With changes to the program (using the fire buttons and other positions)you may add other protection loop but you must insure that you have one switch per loop when using the normally closed switches. You may use as many switches of the normally open version on the loop as you wish.
3. Entry keyswitch (Radio Shack #49-515) or a hidden SPST toggle switch.
4. An audio amplifier and speaker(s) (Your stereo amplifier will work jus fine but the alarm will only be sounded in the house)
5. A cable to hook the audio out port from the console to the amp.(If you have a monitor cable these will work fine. Some are available for the TI from Super Valu stores for $10.95)
6. Joystick connector(Radio Shack #276-1538)
7. Hook-up wire

To run a simple demonstration of the program you will need two joysticks and your TV or monitor.

First, you may want to set the delay variables in lines 150 and 160. Lin 150 is the exit delay variable. This allows you time to leave the house after you turn on the keyswitch. If you mount the keyswitch outdoors, then set this variable to 1.

The variable in line 160 sets the entry delay. This one allows you time enter your home and disarm the system with the keyswitch before the alarm sounds. Remember to set this one on the fast side because it also delays in t event of a break-in.

When you type RUN, the words "PLEASE REMOVE ALPHA LOCK" and "PRESS 'C' T CONTINUE" appear. Follow the instructions and next comes "PERIMETER CHECK (Y/N)?". If you press "Y" the program jumps to line 700 and checks Joystick 1 for any openings in the protection loop. If an opening is found(such as J1 in the center position)the program sounds a warning and tells you too check and remedy the situation. Do this by moving J1 to the down position and holding i there. Now push the "R" key and the program goes back to line 310 and sounds the OK chime.

The word "UNARMED" appears and tells you that the system is now ready fo input from the keyswitch. When you turn the keyswitch on(by holding J2 in the UP position and J1 in the DOWN position)the program goes to the exit delay loop. This loop allows you to leave your home without triggering the system. Once this times out the program begins looping and checking each of the joysticks for a change in state.

```
220 DISPLAY AT(2,2):"TI LITE PEN LOAD PROGRAM"
230 DISPLAY AT(5,4):"LOAD DRIVE:"
240 DISPLAY AT(7,5):"one"
250 DISPLAY AT(9,5):"TWO"
260 DISPLAY AT(11,5):"THREE"
270 FOR D=1 TO 3
280 CALL JOYST(1,X,Y):: IF X<>0 OR Y<>0 THEN DR=1 :: GOTO 400
290 NEXT D
300 DISPLAY AT(7,5):"ONE"
310 DISPLAY AT(9,5):"two"
320 FOR D=1 TO 6
330 CALL JOYST(1,X,Y):: IF X<>0 OR Y<>0 THEN DR=2 :: GOTO 400
340 NEXT D
350 DISPLAY AT(9,5):"TWO"
360 DISPLAY AT(11,5):"three"
370 FOR D=1 TO 4
380 CALL JOYST(1,X,Y):: IF X<>0 OR Y<>0 THEN DR=3 :: GOTO 400
390 NEXT D :: GOTO 240
400 GOSUB 1150
410 OPEN #1:"DSK"&STR$(DR)&".",INPUT ,RELATIVE,INTERNAL
420 INPUT #1:A$,J,J,K
430 DISPLAY AT(4,1):"NAME: "&A$ :: DISPLAY AT(4,19):"AVAL:";K
440 DISPLAY AT(5,1):RPT$("-",28)
450 FOR RD=1 TO 100
460 INPUT #1:PG$(RD),A,J,K
470 IF LEN(PG$(RD))=0 THEN 560
480 IF RD>19 THEN DY=12 :: DX=RD-14 ELSE DX=RD+5 :: DY=1
490 DISPLAY AT(DX,DY):PG$(RD)
500 FOR C=1 TO LEN(PG$(RD))
510 SG$=CHR$(ASC(SEG$(PG$(RD),C,1))+32)
520 IF ASC(SG$)<97 OR ASC(SG$)>122 THEN SG$=SEG$(PG$(RD),C,1)
530 CP$(RD)=CP$(RD)&SG$
540 NEXT C
550 NEXT RD
560 CLOSE #1
570 FOR D=6 TO 24 :: DISPLAY AT(D,23):" :: NEXT D
580 P=1 :: V=6 :: W=1
590 DISPLAY AT(V,W)SIZE(10):CP$(P)
600 DISPLAY AT(7,25):"up"
610 DISPLAY AT(9,25):"DOWN"
620 DISPLAY AT(11,25):"LEFT"
630 DISPLAY AT(13,25):"RGHT"
640 DISPLAY AT(15,25):"RUN"
650 FOR D=1 TO 3 :: CALL JOYST(1,X,Y):: IF X<>0 OR Y<>0 THEN C=1 :: GOTO 850
660 NEXT D
```



```
670 DISPLAY AT(7,25):"UP" :: DISPLAY AT(9,25):"down"
680 FOR D=1 TO 4
690 CALL JOYST(1,X,Y):: IF X<>0 OR Y<>0 THEN C=2 :: GOTO 850
700 NEXT D
710 DISPLAY AT(9,25):"DOWN" :: DISPLAY AT(11,25):"left"
720 FOR D=1 TO 4
730 CALL JOYST(1,X,Y):: IF X<>0 OR Y<>0 THEN C=3 :: GOTO 850
740 NEXT D
750 DISPLAY AT(11,25):"LEFT" :: DISPLAY AT(13,25):"rght"
760 FOR D=1 TO 4
770 CALL JOYST(1,X,Y):: IF X<>0 OR Y<>0 THEN C=4 :: GOTO 850
780 NEXT D
790 DISPLAY AT(13,25):"RGHT" :: DISPLAY AT(15,25):"run"
800 FOR D=1 TO 4
810 CALL JOYST(1,X,Y):: IF X<>0 OR Y<>0 THEN C=5 :: GOTO 850
820 NEXT D
830 DISPLAY AT(7,25):"up" :: DISPLAY AT(15,25):"RUN"
840 GOTO 650
850 ON C GOTO 860,920,970,1030,1090
860 IF V=6 THEN 650
870 DISPLAY AT(V,W)SIZE(10):PG$(P)
880 DISPLAY AT(7,25):"up"
890 P=P-1 :: V=V-1
900 DISPLAY AT(V,W)SIZE(10):CP$(P)
910 GOTO 650
920 IF V=24 OR P=RD-1 THEN DISPLAY AT(9,25):"DOWN" :: DISPLAY AT(7,25):"up" :: G
OTO 650
930 DISPLAY AT(V,W)SIZE(10):PG$(P)
940 DISPLAY AT(9,25):"DOWN" :: DISPLAY AT(7,25):"up"
950 P=P+1 :: V=V+1
960 GOTO 900
970 IF W=1 THEN DISPLAY AT(11,25):"LEFT" :: DISPLAY AT(7,25):"up" :: GOTO 650
980 DISPLAY AT(V,W)SIZE(10):PG$(P)
990 W=1 :: P=P-19
1000 DISPLAY AT(V,W)SIZE(10):CP$(P)
1010 DISPLAY AT(11,25):"LEFT" :: DISPLAY AT(7,25):"up"
1020 GOTO 650
1030 IF RD-1<=19 OR W=12 OR P+19>RD-1 THEN DISPLAY AT(13,25):"RGHT" :: DISPLAY A
T(7,25):"up" :: GOTO 650
1040 DISPLAY AT(V,W)SIZE(10):PG$(P)
1050 W=12 :: P=P+19
1060 DISPLAY AT(V,W)SIZE(10):CP$(P)
1070 DISPLAY AT(13,25):"RGHT" :: DISPLAY AT(7,25):"up"
1080 GOTO 650
1090 ! RUN ROUTINE
```

MEETING MINUTES

The June meeting: A swap meet was held and was not too successful due to the poor turn-out and lack of items to be sold. However some business was transacted and a raffle was held. The prize was a "Green-Screen" monitor that was donated to the club. The winner...Joe Costa III. Come to the August meeting, maybe we'll have some more.

The attendance at the July meeting was not as good and therefore no club business occured. A Lite-Pen load progam was demonstrated by Edgar Lecuyer from 7:30 to 8:00. Due to the lack of a prize, a raffle was not held.
- Reported by Edgar Lecuyer

A LITE-PEN LOAD PROGRAM

The following program provides another aplication for the Lite-Pen created by the San Fransico 99'ers. To build the pen follow the diagram in the May Issue. (See Mike Bates if you need a copy) The program is in Extended Basic and requires 32K.

P.S. I still have some FREE photocells if anybody wants one. (Edgar)

```
10 DIM PG$(100),CP$(100):: GOTO 130
20 CALL COLOR :: CALL CLEAR :: CALL JOYST :: CALL INIT :: CALL PEEK :: CALL LOAD
 :: CALL SCREEN :: CALL CHAR :: CALL CHARPAT :: CALL HCHAR
30 A,C,X,Y,D,DR,J,K,RD,DX,DY,P,V,W,PP,Q,R,AA,E=0
40 A$,SG$,I$,X$=""
50 !@P-
60 !  LITE-PEN-LOADER
70 !  FOR LITE-PEN MADE BY
80 !  SAN-FRANCISCO 99ERS
90 !  PROGRAM BY:
100 ! EDGAR C. LECUYER
110 ! CLUB99-ATTLEBRO, MA.
120 ! 5/27/87
130 CALL CLEAR
140 CALL SCREEN(2)
150 FOR C=65 TO 90
160 CALL CHARPAT(C,X$):: CALL CHAR(C+32,X$)
170 NEXT C
180 FOR C=2 TO 8 :: CALL COLOR(C,8,2):: CALL COLOR(C+4,2,16):: NEXT C
190 CALL CHAR(128,"FFFFFFFFFFFFFFFF")
200 CALL COLOR(13,16,16)
210 CALL CHAR(136,"2424242424242424")::  CALL COLOR(14,8,2)
```

```
1100 GOSUB 1150
1110 DISPLAY AT(12,1):"NOW LOADING: ";PG$(P)
1120 CALL INIT :: CALL PEEK(-31952,PP,Q):: CALL PEEK(PP6+Q-65534,PP,Q):: R=PP
6+Q-65534 :: I$="DSK"&STR$(DR)&"."&PG$(P):: CALL LOAD(R,LEN(I$))
1130 FOR AA=1 TO LEN(I$):: CALL LOAD(R+AA,ASC(SEG$(I$,AA,1))):: NEXT AA :: CALL
LOAD(R+AA,0):: GOTO 1220
1140 ! CLEAR SCREEN
1150 CALL HCHAR(3,1,128,32)
1160 FOR E=3 TO 24
1170 CALL HCHAR(E,1,128,32)
1180 CALL HCHAR(E,1,32,32)
1190 NEXT E
1200 RETURN
1210 !@P+
1220 RUN "DSK1.XXXXXXXXXX"
```

WIDGET_MODULE_BRACE

By C.B. Doan

If you are fed up with your modules flopping around and possibly losing contact with the connectors, then here is a cure that I came up with. All it takes is a piece of plexiglas .10" thick 4 1/4" wide by 8" long. Cut four pieces, one inch wide, off one end of the stock. At that time you should file or sand the edges to make a flat surface where it will be attached to the remaining piece. The remaining piece should be 4 1/4" X 3 1/4". When assembling my brace I cut four 1/2" deep slots in a scrap piece of 1 X 4 leaving 7/8" between them. The four 1" X 4 1/4" pieces were then placed in the slots and the top piece clamped to them. With everything in place and accurately positioned, flow the adhesive (methyl chloride) down the edge of each joint and it will be pulled into the joining area by capillary action. Allow the project to remain clamped overnite to insure a strong bond. I have used mine now for several months and experienced any problems with floppy modules. One side benifite is that it forms a handy table to lay disks on when backing up programs.

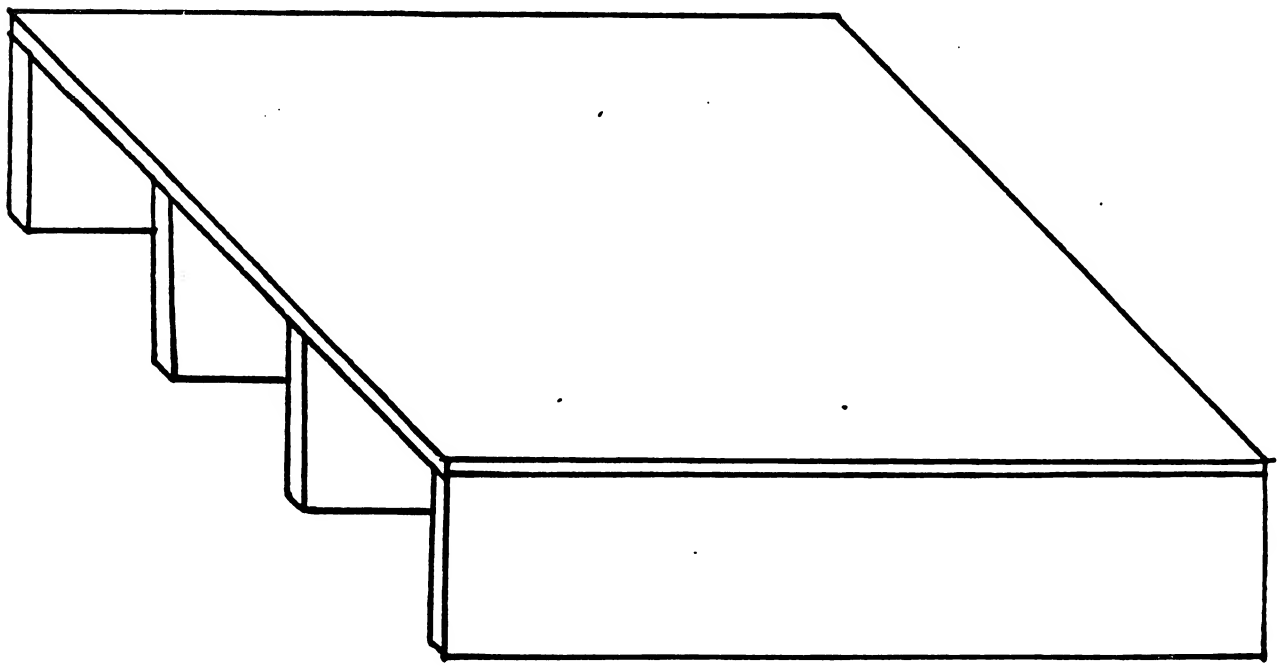

This is a reprint of an article from the C.C.99'ER, Feb. 1986, by JIM BURES.

TIC-TAC-TOE with LIGHT-PEN

I've seen several schematics for LIGHT-Pens that work with the T.I., but I havent seen any programs that utilize the pen. I decided to build one for the novelty of it, but I had to write a small program for it. I found all the parts at a RADIO SHACK, and the part numbers are listed in this article. Because of several differences in the schematics I reviewed, and only a basic understanding of electronics, I constructed the project on an experimenters breadboard, so that changes could be made.

After several tries, the pen worked, but was so sensitive to the slightest ray of light from anywhere set the pen off. A black hood over the photo-transistor with only a small hole in the end and some delay loops in the program solved the problem. Now about the program. It is in Extended Basic only because I wanted to use sprites.

Lines 130 to 350 set up the game board and defines characters. Lines 360 to 550 are the meat of the program. Line 430 checks to see if the light-pen has been set off by a light source (in this program it is a white colored sprite). The rest of the program lines will determine which marker (X or Y) goes where. The program is not really complete because no checks are done to see who wins. I'll leave that to you.

JIM

(Ed. note: There is a basic version of this program, that does more checking, but for the sake of providing a program, and a light-pen for you who havent built one, I'm including this one. There is also another program that uses a double set of light-pens for gaming between two players on one screen.)

```
100 REM $  TIC-TAC-TOE   $
110 REM $ LIGHT-PEN DEMO $
120 REM $  BY JIM BURES  $
130 F=1 :: Z=1
140 DIM A(9,2)
150 CALL COLOR(3,12,1):: CALL CO
LOR(4,12,1)
160 A(1,1)=16 :: A(1,2)=16 :: A(
2,1)=16 :: A(2,2)=104 :: A(3,1)=
16 :: A(3,2)=104
170 A(4,1)=80 :: A(4,2)=16 :: A(
5,1)=80 :: A(5,2)=104 :: A(6,1)=
80 :: A(6,2)=104
180 A(7,1)=144 :: A(7,2)=16 :: A
(8,1)=144 :: A(8,2)=104 :: A(9,1
)=144 :: A(9,2)=
104
190 CALL SCREEN(2)
200 CALL COLOR(10,13,1)
210 CALL CLEAR
220 S1$="8040201008040201010204080
8102040800102040810204080804020100
8040201"
230 CALL CHAR(96,S1$)
240 CALL MAGNIFY(4)
250 S2$="FF8080808080808080808080
8080808FFFF0101010101010101010101
0101010FF"
260 CALL CHAR(100,S2$)
270 CALL DELSPRITE(ALL)
280 CALL CHAR(104,"1010101010101
010")
290 CALL VCHAR(1,20,104,24)
300 CALL VCHAR(1,10,104,24)
310 CALL CHAR(105,"FF00")
320 CALL HCHAR(8,1,105,32)
330 CALL HCHAR(16,1,105,32)
340 S3$="FFFFFFFFFFFFFFFFFFFFFF
FFFFFFFFFFFFFFFFFFFFFFFFFFFFFFFF
FFFFFFFFFF"
350 CALL CHAR(108,S3$)
360 Z=Z+1
370 IF F<=0 THEN S=96 ELSE S=100
380 FOR I=1 TO 9
390 R=A(I,1):: C=A(I,2)
400 IF A(I,1)=0 THEN 470
410 CALL SPRITE(#1,108,16,R,C)
420 FOR D=1 TO 6
430 CALL JOYST(1,X,Y)
440 IF X THEN 490
450 NEXT D
460 CALL DELSPRITE(#1)
470 NEXT I
480 GOTO 370
490 CALL DELSPRITE(#1):: CALL SO
UND(500,990,1):: CALL SOUND(50,4
0000,30)
500 FOR D=1 TO 6 :: NEXT D
510 CALL SPRITE(#Z,S,3,R,C)
520 Q=Q+1 :: IF Q=9 THEN 550
530 A(I,1)=0 :: A(I,2)=0
540 F=-F :: GOTO 360
550 GOTO 550
```

SCHEMATIC and PARTS LIST

R1 - 470K ohm R2 - 47K ohm
Q1 - 2N907 Tran. R.S. # 276-2023
Q2 - TIL414 Phototran R.S.# 276-145
C1 - 0.01 mF capacitor R.S.# 272-1472
S1 - Any small momentary contact switch
D1 - OPTIONAL Diode 1N914 or 1N34A

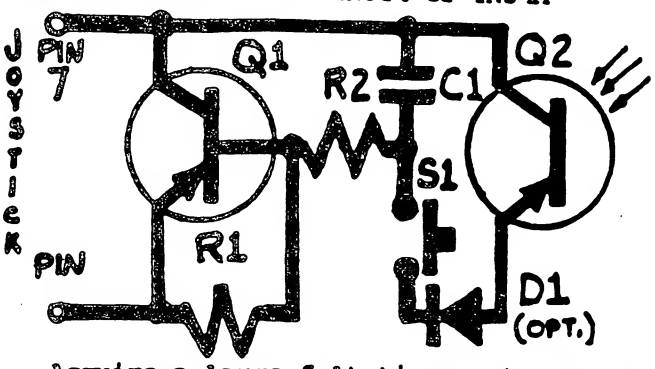

Acquire a large felt tip pen to use as a housing for the above aparatus. An old joystick cable will make a perfect cable with the female 9-PIN D TYPE connector, which will make assembly easier, faster, and definitly more economical.

(** WP99 UG assumes no responsibility for any damage you may do to your console attempting to install this feature **)

****
Name: LIGHTPEN
****

Description: This file shows how to build a low cost lightpen and even has an XB program for it!

99/4A LIGHT PEN

At one time I felt that a light pen for the 4A was 1) not possible on the TI and 2) even if it was possible, it would be overpriced. Well I was wrong on both counts.

Thru the help a local 'hacker', we now have a working light pen. This pen is very 'simple' both in parts and constuction. So lets get started.

CONSTRUCTION

First off you will need the following:

ONE- 9 pin D-plug (joystick plug)
TWO- lengths (your choice) of 2 conductor wire
TWO- CDS photocells
TWO- junk Flair pen w/cap
(or anything big enough to hold the CDS cells

Now that you have the above, lets get to the fun part. First off gut the pens out and cut off the end that the tip was in, and then punch out the end of the cap. Feed the wire thru the bottom of the pen out the tip. Solder the the two wires to the leads of the CDS cell, and place the cell into the cap and put it on the old pen body. Tape the wire around the pen to help prevent it from pulling out by accident.

Grab the D-plug and hard wire the leads (pin layout is below) for pen #1 to pin #7 and #9 (this would be the right direction with CALL JOYST), with pen #2 solder it to pins #2 and #5 (CALL JOYST left direction). If you have not figured it out yet, you can add up to four more pens using the other moves of the joystick routine. Wrap tape around the plug to protect the wiring.

Now if you have not yet converted the included program yet with it, so you can test your new light pens. As you can tell the program name is "DOT" and you just touch the dots on the screen with the pen. Depending upon your TV/monitor, you may need to adjust the contrast/brightness.

One more thing before you get too busy with the pens I have to give credit to Edwin McFall of Aberdeen, Wash. Thru his work this is possible. Hopefuly he will be joining us here soon. If you have any questions direct them to me: Garry Noel ID# 75166.324

JOYSTICK PORT PINOUT

```
\ 1 2 3 4 5 /
  \ 6 7 8 9 /
```

PIN	USE
1	NOT USED
2	COMMON LINE JOYST #2
3	UP
4	FIRE
5	LEFT
6	NOT USED
7	COMMON LINE JOYST #1
8	DOWN
9	RIGHT

```
100 !-----------------!
110 !                 !
120 ! @@@@   @@@  @@@@@ !
130 !  @  @ @   @   @  !
140 !  @  @ @   @   @  !
150 !  @  @ @   @   @  !
160 !  @  @ @   @   @  !
170 !  @  @ @   @   @  !
180 ! @@@@   @@@   @  !
190 !                 !
200 !-----------------!
210 REM by: Edwin McFall
220 REM 2005 W. 6th
230 REM ABERDEEN WA.
240 REM 98520
250 REM TI 99/4A VER. 1.1
260 REM REQUIRES LIGHTPEN
270 REM AND EXTENDED BASIC
280 REM
290 REM
300 CALL CLEAR :: CALL SCREEN(2)
310 FOR I=1 TO 10 :: CALL COLOR(I,5-11*(I)8).1):: NEXT I
320 RANDOMIZE
330 FOR I=0 TO 2
340 CALL CHAR(96+8*I,"3C7EFFFFFFFF7E3C")
350 CALL COLOR(9+I,1,1)
360 NEXT I
370 PRINT " 'hp'hp      'hp
    'hp'hp    hp'  '    p'h '
h   p'h     hp'  h  hp'"
380 PRINT " hp'  h  hp'
h   p'h     hp'  h  hp'
h   p'h     hp'  '    p'h '
    p'h"
390 PRINT " 'hp'hp      'hp
    p'h": : : : :
400 PRINT : :"'hp'hp'hp'hp'hp'hp'hp'hp'hp'hp'hp'hp'hp'hp'hp'p    BY: EDWIN MCFALL    hh  TOUCH DOT TO CONTINUE.  p'ph'ph'ph'ph'ph'ph'ph'ph'ph'ph'"
410 CALL JOYST(1,X,Y):: IF X<>0 OR Y<>0 THEN 480
420 FOR C=1 TO 3
430 CALL COLOR(9,7-4*(C=1)-8*(C=2),1)
440 CALL COLOR(10,7-4*(C=2)-8*(C=3),1)
450 CALL COLOR(11,7-4*(C=3)-8*(C=1),1)
460 NEXT C
470 GOTO 410
480 CALL SOUND(100,440,0):: CALL CLEAR :: SC=0
490 DISPLAY AT(12,9):"EASY HARD"
500 DISPLAY AT(16,7):"SELECT DIFFICULTY" :: DISPLAY AT(18,1):"EASY=LARGE DOTS. HARD==SMALL."
510 CALL HCHAR(12,9,112):: CALL HCHAR(12,19,104)
520 CALL COLOR(11,16,16,10,2,2)
530 FOR I=1 TO 10
 40 CALL JOYST(1,X,Y):: IF X=4 THEN CALL MAGNIFY(2):: GO TO 610
550 NEXT I
560 CALL COLOR(11,2,2,10,16,16)
570 FOR I=1 TO 10
580 CALL JOYST(1,X,Y):: IF X=4 THEN CALL MAGNIFY(1):: GO TO 610
590 NEXT I
600 GOTO 520
```

```
  REM  ********************
2 REM  *CONSOLE BASIC or XB*
3 REM  *JOYSTICK PORT HOME *
4 REM  *SECURITY PROGRAM   *
5 REM  *BARE BONES ONLY!   *
6 REM  ********************
10 CALL CLEAR
20 A$="HOME SECURITY SYSTEM"
30 FOR T=1 TO LEN(A$)
40 COL=COL+1
50 CALL HCHAR(12,2+COL,ASC(SEG$(A$,T,1)))
60 CALL SOUND(50,440,1)
70 NEXT T
80 FOR T=1 TO 1000
90 NEXT T
100 FOR P=1 TO 10
110 PRINT
120 NEXT P
130 CALL CLEAR
140 PRINT "How many minutes do you want"
150 PRINT "the computer to wait before"
160 PRINT "it goes into protect mode?"
170 PRINT
180 INPUT "":A
190 PRINT
200 PRINT "What character do you want"
210 PRINT "to use to keep the alarm"
220 PRINT "from sounding?"
230 PRINT
240 PRINT
250 PRINT
260 INPUT "":SECURITYCHAR$
270 PRINT
280 PRINT "How many minutes do you want"
290 PRINT "the computer to wait before"
300 PRINT "it sounds the alarm?"
310 PRINT
320 INPUT "":STIME
330 PRINT
340 PRINT "Press space bar when you are
350 PRINT "ready to leave."
360 CALL KEY(0,KEY,STATUS)
370 IF KEY=32 THEN 390
380 GOTO 360
390 TIME=A*14000
400 CALL CLEAR
410 PRINT "COMPUTER NOW IN PROTECT MODE
420 FOR T=1 TO TIME
430 NEXT T
440 CALL CLEAR
450 CALL JOYST(2,A,B)
460 IF B<>-4 THEN 480
470 GOTO 450
480 CALL CLEAR
490 PRINT "You now have";STIME;"minutes
500 PRINT "to enter security code"
510 PRINT "before alarm sounds."
520 TIMEOUT=STIME*1000
530 FOR T=1 TO TIMEOUT
540 CALL KEY(0,KEY,STATUS)
550 IF KEY=ASC(SECURITYCHAR$)THEN 620
560 NEXT T
570 CALL CLEAR
580 CALL SOUND(500,-3,0)
590 FOR X=1 TO 200
600 NEXT X
610 GOTO 580
620 CALL CLEAR
630 PRINT "Protect mode disabled".
640 END
```

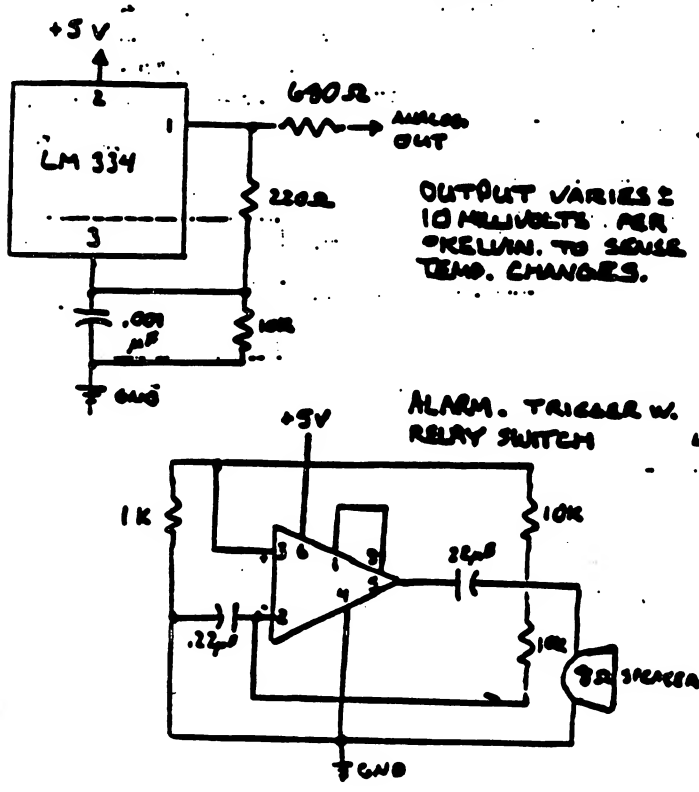

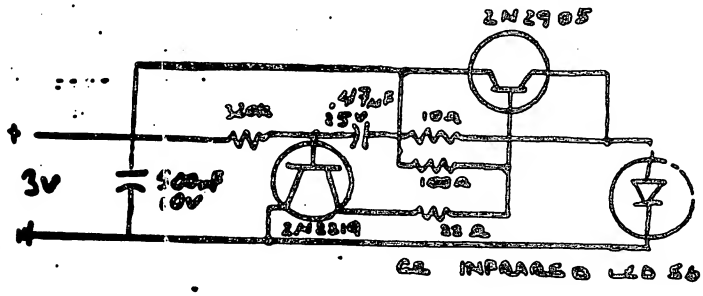

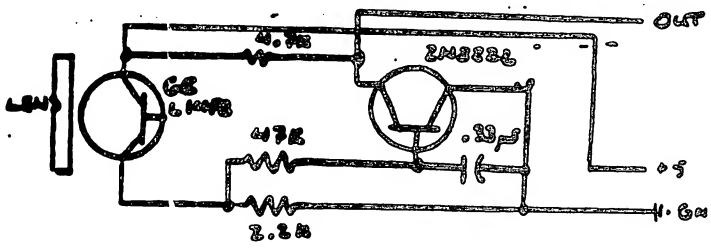

INFRARED SENSOR BEAM FOR INTERIOR DOORS / HALLS ETC.

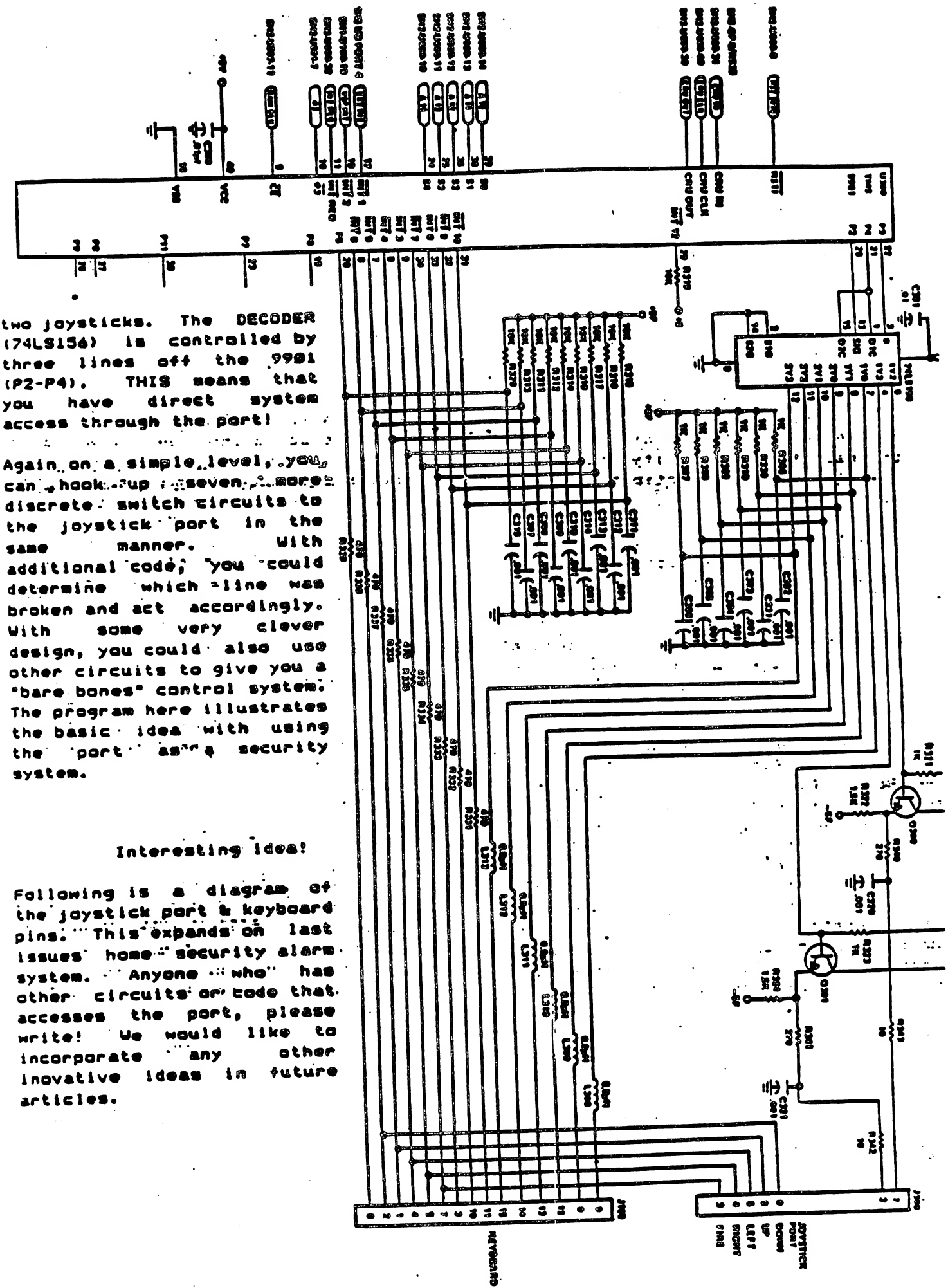

two joysticks. The DECODER (74LS156) is controlled by three lines off the 9901 (P2-P4). THIS means that you have direct system access through the port!

Again on a simple level, you can hook up seven more discrete switch circuits to the joystick port in the same manner. With additional code, you could determine which line was broken and act accordingly. With some very clever design, you could also use other circuits to give you a "bare bones" control system. The program here illustrates the basic idea with using the port as a security system.

Interesting idea!

Following is a diagram of the joystick port & keyboard pins. This expands on last issues home security alarm system. Anyone who has other circuits or code that accesses the port, please write! We would like to incorporate any other inovative ideas in future articles.

"THE CASE OF THE MI[illegible]ING CARTRIDGE" or
"HOW TO PLAY THE SLOTS" by [illegible]le A. Dann - Milwaukee 99

After reading "INSTALLING EXTENDED BASIC INSIDE YOUR CONSOLE" by John F. Willforth of West Penn 99, I proceeded to make the necessary modifications. My efforts were rewarded with a well functioning unit. Then I discovered that of course I couldn't have a cartridge in the prom port at the same time X-Basic is loaded unless I wanted a fine array of Assembly Language Codes on the screen. Furthermore, if I used a *Cartridge Expander I now have to leave one connector open in order to use the X-Basic option. However I had a Navarone two-cartridge "Widget". With the aid of a Jeweler's file and 15 minutes time, a simple modification of the indexing switch allowed me to restore it to a three-cartridge Expander with a four position indexing switch.

1. Remove cartridges from expander.

2. Remove four (4) phillips screws from back side of Expander and and gently separate housing, noting position of components.

   Note: modifications will be made to top side of housing and white index switch slider.

3. File index switch opening an additional 1/8" towards front of housing.

4. When switch normally bottoms out at position 3, there is approximately 1/16" of clearance to the inside front edge of housing. Therefore you need only to file 1/16" off of front edge of switch slider for a total of 1/8" clearance.

5. Reassemble components and you now have a 4 position index switch with one open circuit position to facilitate the use of the internal X-Basic mode.

6. Label the switch opening (1 2 3 X).

   REMEMBER: If you see assembly language on the screen check all switch positions first.

7. In addition to the above...putting a length of double-stick tape on the feet of the Expander will provide a nice tight installation preventing movement of the Expander by accidental bumps.

Many thanks to John Willforth for a neat project; and to Navarone for a fine product.

*Cartridge Expander is a Trademark of
Navarone Industries - Sunnyvale, California

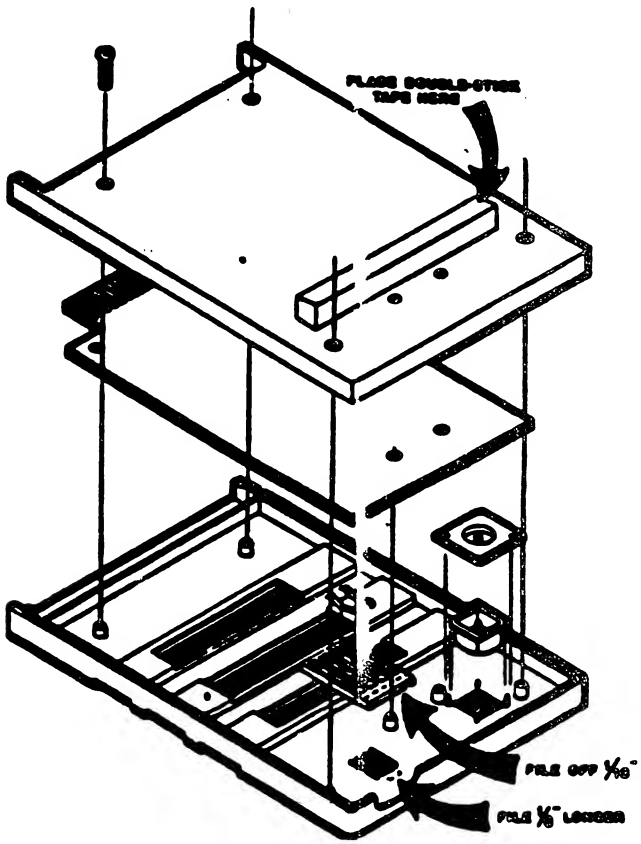

DO IT YOURSELF MODULE PORT EXPANDER...
By: Terry Ross, HV99ers

The interest of other members who require a cartridge expander with a capability of four or five cartridges, and the added advantage of placing the unit out of the way of th console, I am including details of a unit which I have constructed and works on my own TI99/4A but may require some additional circuitry. I will advise as I proceed further by way of the newsletter to any changes I make.

My own unit has six modules ports housed in a plastic container. Using a six way pole rotary pole selector switch and a momentary on push button reset switch to return to the master title screen prior to selecting the required module. These items (including some resistors and capacitors) are connected via a 36 way IDC cable and a disused module which plugs directly into the module port.

Build the unit on a copper strip board and solder all items on the precut copper tracks, then wire wrapped all pins between each edge connector. (an etched board would have saved a considerable amount of time in construction) Diagrams are shown, one giving the pinouts of the module port looking from the front of the console and the second showing the working diagram.

==========

Parts required:

Some .01 ceramic capacitors	47 - 51K ohm resistors 5%
Copper strip board or circuit board	36 way d/sided edge connector
36 way IDC cable	6 way 2 pole switch
Momentary action push button	Case with lid
Wire used for wire wrapping	Disused module with D/S edge connector card (Munchman, etc)

==========

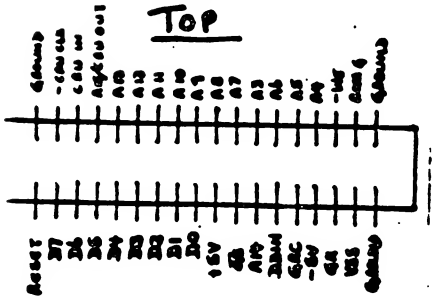

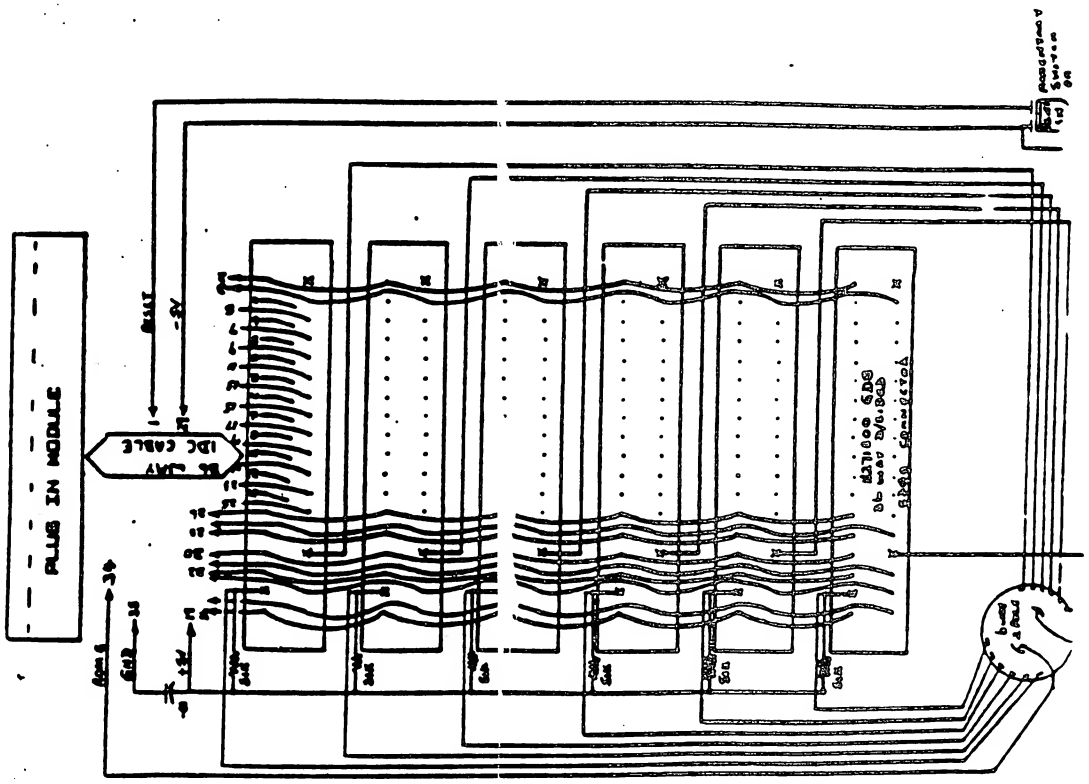

IF YOU DECIDE THAT REMOVING THE TRUSTY SPEECH SYNTHESIZER FROM IT'S HOME ON THE RIGHT SIDE OF YOUR CONSOLE, WHERE IT'S BEEN SINCE YOU SPENT $240 SOME ODD DOLLARS (SIX CARTRIDGES YOU GET ONE FREE SPEECH SYNTHESIZER, REMEMBER?), JUST TO PUT IT INSIDE THE MACHINE WHERE NO ONE, NOT EVEN YOUR FRIEND WITH THE ATARI, OR THE COMMA (WHO BY THE WAY PROBABLY DOESN'T EVEN HAVE SPEECH ON HIS)CAN SEE IT, IS WORTH IT, THEN READ ON. (SAY THAT WITH ONE BREATH WILL YOU?)

I'M GOING TO LEAVE THE FACT OF WEATHER OR NOT YOU HAVE ALREADY INSTALLED 32K OF MEMORY INSIDE YOUR CONSOLE NOT CLOUD THE DESCRIPTION HERE, EXCEPT TO STATE THAT THERE IS ROOM FOR BOTH INSIDE THE CONSOLE ABOVE THE UPPER SHIELD, TO THE LEFT OF THE GROM PORT.

FIRST YOU SHOULD PREPARE A STATIC FREE PLACE TO WORK, NO CARPET UNDERFOOT, TRY TO WEAR COTTON CLOTHING, MOVE AROUND AS LITTLE AS POSSIBLE, AND TRY TO PROVIDE YOURSELF WITH A GOOD EARTH GROUND AT THE IMMEDIATE WORK AREA. GOOD LIGHTING IS IMPORTANT, AND THE JOB WILL ALWAYS PROGRESS FASTER AND YOU WILL BE LESS FRUSTRATED IF YOU HAVE THE RIGHT TOOLS. A PHILLIPS SCREWDRIVER (#2), A 15 to 25 WATT (GROUNDED IF POSSIBLE) SOLDERING IRON, SMALL GUAGE RESIN CORE SOLDER, 10" OF RIBBON CABLE WITH AT LEAST 11 WIRES (OR ANY MULTI-STRAND WIRE EQUIVELANT TO THIS), ELECTRICAL TAPE, AN EXACTO (TYPE) KNIFE, SMALL SIDE CUTTERS OR WIRE STRIPPERS, AND A SMALL PAIR OF PLIARS, PREFERABLY NEEDLE NOSE.

REMOVE THE SPEECH SYNTHESIZER UNIT FROM THE ENCLOSURE, AND TAKE THE SHIELDING OFF OF THE BOARD. USING THE TOP PART OF THE DRAWING ON THE PREVIOUS PAGE, ORIENT YOURSELF WITH THE COMPONENT LAYOUT, AS WELL AS THE PIN LOCATIONS ON THE VERY TOP OF THE CARD ITSELF WHERE D3, D1, D5, D6 ARE SHOWN . IF YOU DO NOT WANT ANY CONNECTIONS MADE TO COMPONENTS, YOU CAN ALSO MAKE ALL YOUR CONNECTIONS TO THE PINS COMING FROM THE BLACK PLASTIC CONNECTOR WHICH SOLDERS TO THE SPEECH CIRCUIT CARD. THE PIN NUMBERS ARE:

PIN:	TERM:	PIN:	TERM:	PIN:	TERM:	PIN:	TERM:
1	+5V	19	A15	36	D6	40	D1
2	SBE	23	GND	37	D0	42	D3
3	RESET	34	D7	38	D5	43	-5V
5	A5	35	D4	39	D2	44	AUDIO
12	RDY						

MAKING THE ABOVE CONNECTIONS WILL KEEP THE BOARD CLEAN AND ELIMINATE THE LIKELYHOOD OF DAMAGING A CHIP IN THE SPEECH UNIT WITH A HOT SOLDERING IRON, AS WELL AS ENABLING THE WIRES TO GO TO A MORE COMPACT LOCATION ON THE BOARD.

ATTACH THE WIRES TO THE BOARD EITHER AS SHOWN IN THE DRAWING OR TO THE EDGE CONNECTOR AS DESCRIBED ABOVE.

REMOVE THE COVER FROM YOUR T.I. COMPUTER, AND TAKE THE TOP SHIELD OFF OF THE CPU BOARD. (THE BOARD MUST BE OF THE OLDER TYPE, IN THAT WITH THE BOARD LYING ON THE WORK AREA AS IT WOULD BE IF YOU WERE ACTUALLY USING IT, THE GROM PORT AND I/O PORT ON THE RIGHT, THE CPU PROCESSOR CHIP, THE 64 PIN CHIP, MUST BE HORIZONTAL TO THE FRONT EDGE OF THE CPU CARD) IF THE CPU CHIP IS VERTICLE TO THIS EDGE, THAT IS GOING AWAY FROM YOU, CLOSE THE MACHINE BACK UP AND STOP WITH THIS PROJECT.

YOU MAY LOOK AT THE TOP SHIELD AND SEE THE BEST WAY FOR YOU TO ROUTE THE WIRES THAT GO TO THE CPU BOARD COMPONENTS,THROUGH IT. THESE WIRES COME FROM PINS, 1,2,3, 2,23,43, AND 44 AS SHOWN ABOVE. YOU MAY WISH TO CUT A SLOT IN THE SHIELD FROM ONE EDGE TOWARD THE CENTER OF THE SHIELD AND PROTECT THE EDGE WITH SILICONE CAULKING, OR USE JUST ELECTRICAL TAPE, TO PREVENT DAMAGE TO THE WIRES THAT GO TO THE CPU BOARD.

ATTACH THE 7 WIRES JUST MENTIONED, INSTALL THE SHIELD, AND ATTACH THE REMAINING 10 WIRES, DO THRU D7 AND A5, AND A15 TO THE REAR OF THE GROM CONNECTOR AS SHOWN IN THE INSERT ON THE FIRST PAGE. INSULATE THE BOARD FROM THE SHIELD EITHER BY USING NYLON OR PLASTIC SLEEVES AND SCREWS TO HOLD THE BOARD ABOUT 1/4" TO 1/2" ABOVE THE TOP SHIELD. ASSEMBLE THE CONSOLE. USE A SPEECH CARTRIDGE, OR WHATEVER MEANS YOU HAVE TO TEST OUT THE CARTRIDGE. SEE I TOLD YOU THIS WOULD BE SIMPLE. GOOD LUCK!

JOHN F. WILLFORTH WP99'ERS
(412) 527-6656

INFORMATION NECESSARY TO PUT SPEECH SYNTHESIZER IDE OF CONSOLE
(THIS MAY BE DONE IN ADDITION TO 32K INTERN MEMORY)

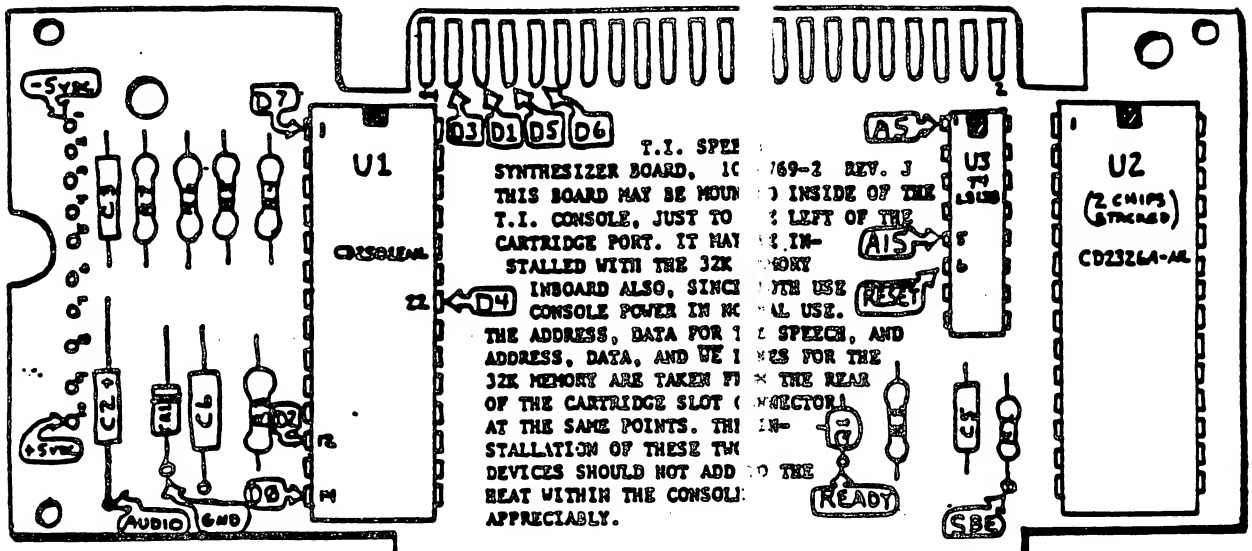

T.I. SPEE
SYNTHESIZER BOARD, 1C 769-2 REV. J
THIS BOARD MAY BE MOUN D INSIDE OF THE
T.I. CONSOLE, JUST TO LEFT OF THE
CARTRIDGE PORT. IT MAY IN-
STALLED WITH THE 32K MORY
INBOARD ALSO, SINCE YTH USE
CONSOLE POWER IN NO AL USE.
THE ADDRESS, DATA FOR T SPEECH, AND
ADDRESS, DATA, AND WE I ES FOR THE
32K MEMORY ARE TAKEN FR THE REAR
OF THE CARTRIDGE SLOT (NECTOR)
AT THE SAME POINTS. THI IN-
STALLATION OF THESE TWO
DEVICES SHOULD NOT ADD TO THE
HEAT WITHIN THE CONSOLE
APPRECIABLY.

MUCH CREDIT MUST BE GIVEN TO THE CEDAR RAPIDS USERS GROUP FOR THEIR CONTINUED EFFORTS IN MODIFYING THE HARDWARE FOR THE T.I. 99. GARY BISHOP ESPECIALLY.

BLACK PLASTI CONNECTOR
I/O TO CONSOLE CONNECTOR ON RIGHT
SIDE OF THE T.I. 99/4A COMPUTER.

THERE ARE 17 ADDRESS, DATA, CONTROL, AND POWER LINES THAT GO FROM THE SPEECH UNIT ABOVE TO THE CPU BOARD BELOW. FOR EASE OF LOCATING IN THIS DRAWING, I HAVE SHOWN THEM ON ONE SIDE OF THE BOARD. IF YOU WOULD LIKE TO MAKE ALL OF YOUR CONNECTIONS ON THE SPEECH UNIT AT THE CONSOLE I/O CONNECTOR RATHER THAN ON THE COMPONENTS, SEE THE NEXT PAGE.

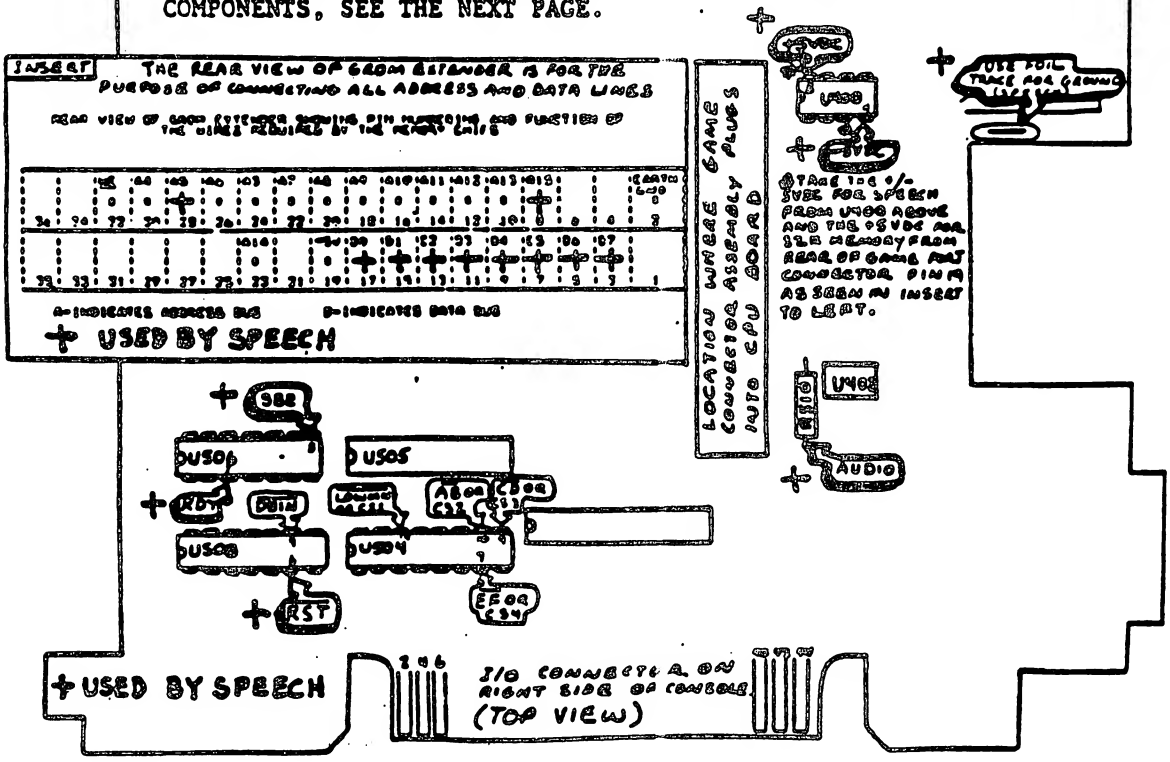

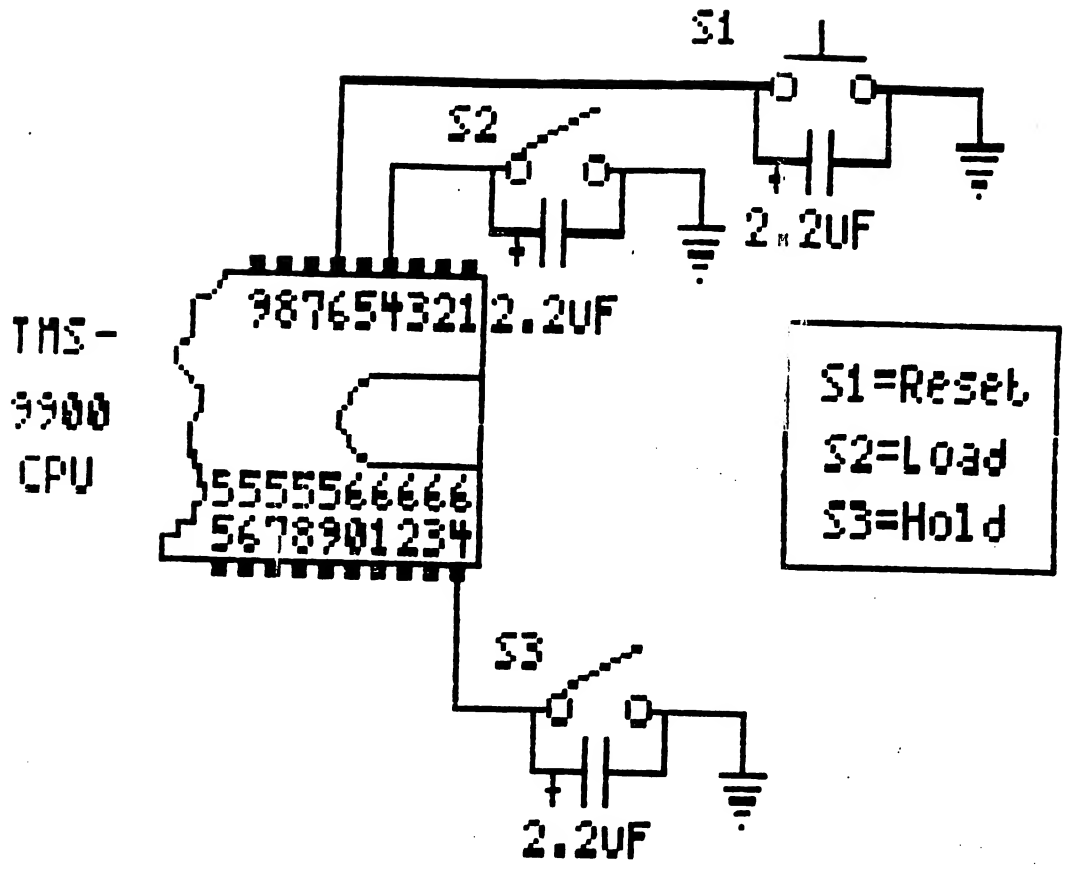
S1
S2
2.2UF
2.2UF
TMS-
9900
CPU
9876543210
5555566666
5678901234
S1=Reset
S2=Load
S3=Hold
S3
2.2UF

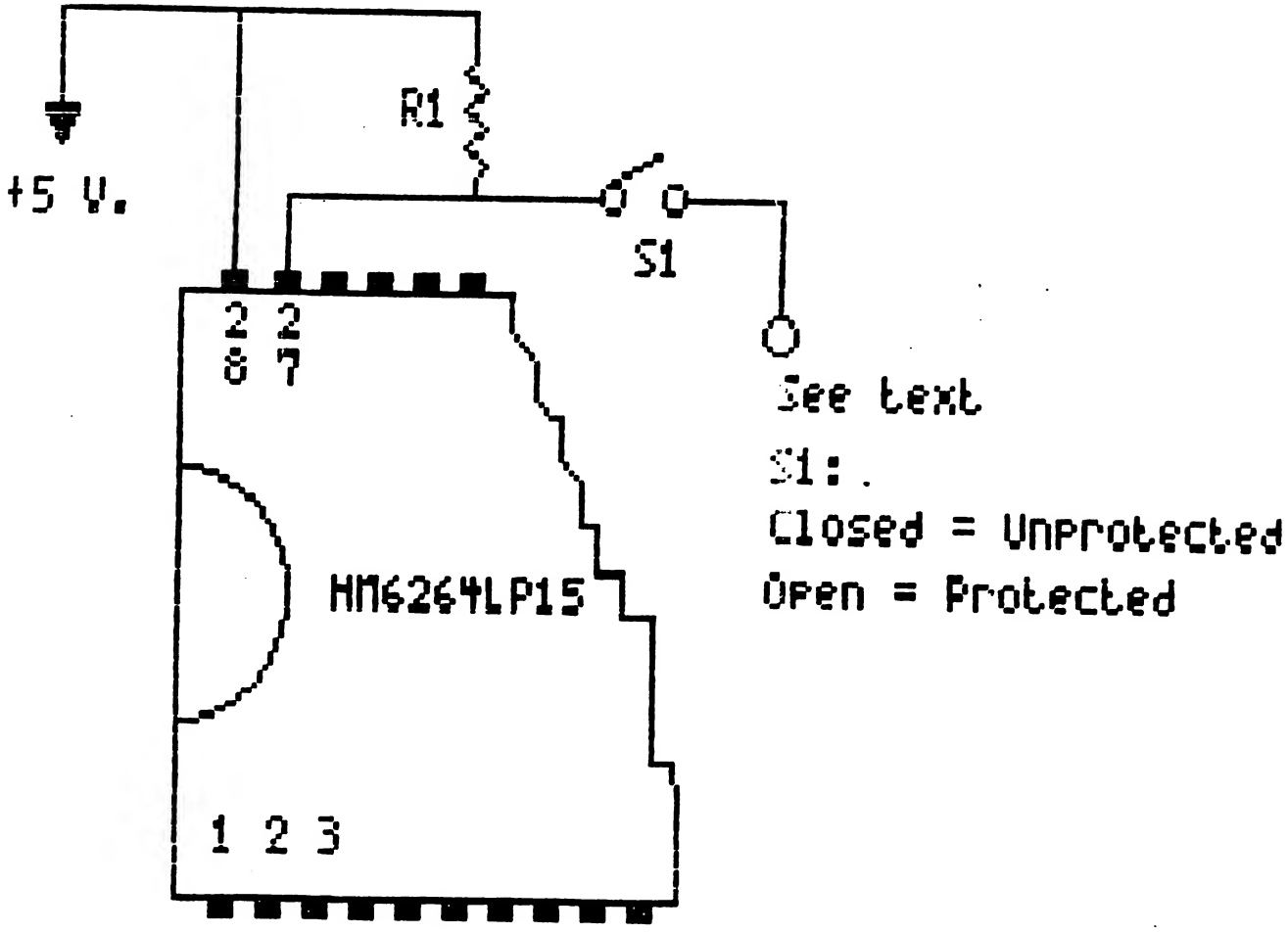
R1
+5 V.
S1
2 2
8 7
HM6264LP15
1 2 3
See text
S1:
Closed = Unprotected
Open = Protected

RESET SWITCH, CARTRIDGE INSERT BUT NO RESET MODIFICATION !

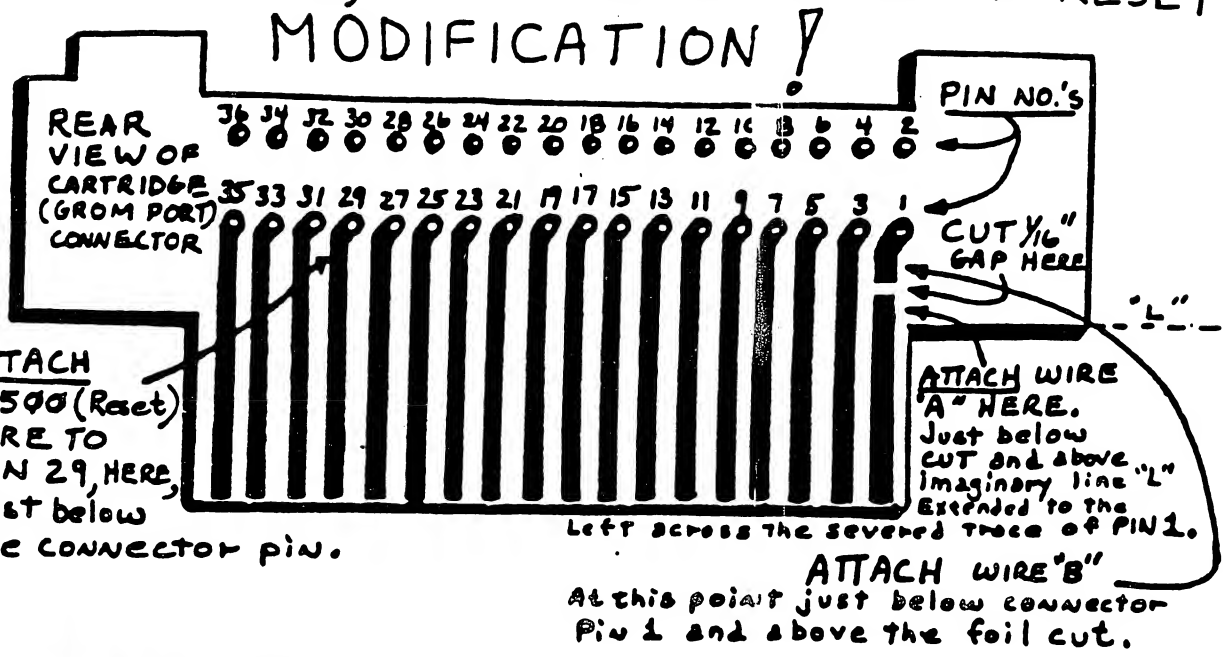

ONE SWITCH OPTION:

This switch exists but is relatively hard to find. Commonly used IN MINI-COMPUTERS DURING THE 80's and 70's. SURPLUS GOOD SOURCE.

Y= Center position, allows for you to insert cartridge into your console with no reset occuring. (useful for cartridge or screen dumps of cartridges)

X= Push and release allows the console to receive a reset (useful for freeing a locked console, without powering the console off.

Z= Normal (switch stays in this position when selected) PUTS the cartridge slot back into the mode that T.I. originally designed.

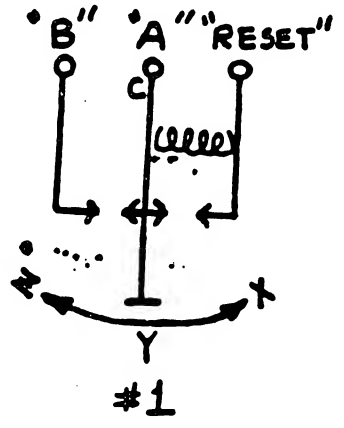

TWO SWITCH OPTION: (IF YOU CAN'T FIND THE SWITCH SHOWN ABOVE)

THIS SWITCH NEEDS ONLY TO BE SINGLE THROW, SINGLE POLE. (EITHER AN OPEN OR CLOSED CIRCUIT)

THIS IS A MOMENTARY CONTACT SW. JUST TAP IT TO CLOSE THE CONTACTS BRIEFLY

These 2 switchs now can function the same as the single switch above. WIRE "A" WILL BE ATTACHED TO ONE SIDE OF THE TWO SWITCHES.

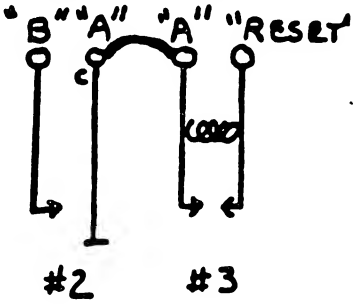

FEATURES:
- RESET BUTTON FOR CPU WITHOUT SHUTTING OFF CPU.
- CARTRIDGE INSERTION WITHOUT RESET (CARTRIDGE DUMPS).
- NORMAL OPERATION NOT MODIFIED.

This is the easiest hardware modification I've written about yet. TRY IT, YOU'LL LIKE IT! (Your Responsibility) John F. Willforth (112)527-6656

West Penn 99's Club. Jeaneatte.PA

If J1 suddenly becomes open the program moves to the entry delay loop. This delay allows you to enter your home and disarm the system with the keyswitch without setting it off. If the timer times out(eg. break-in)the program now sounds the alarm. You can simulate this by letting J1 return to the center position. Even if you were to close the door now it is too late, the timer is running down and the only way to stop it is too disarm the system.

Any number of changes and additions can be made to the program limited only by your imagination and your requirements. The intention of this routine was to give you an idea of what is possible and also to be as simple as possible. There are also heat detectors available that work on the normally open and normally closed switch principals so a fire alarm can also be added.

Try it out and if you have any questions, see me at the next meeting or call me at 253-0794. If you have any ideas on how to improve the program I would be interested to hear from you also.

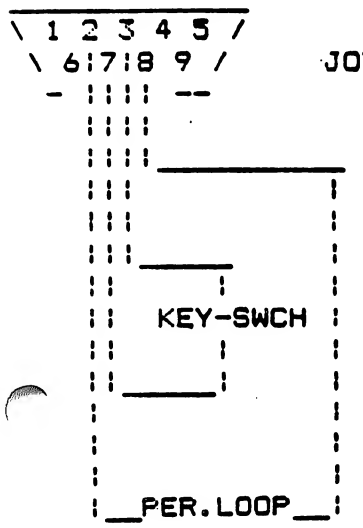

PINOUTS

1 No Conn.
2 Right Grd.
3 Up
4 Fire Buttons
5 Left
6 No Conn.
7 Left Grd.
8 Down
9 Right

Rick Lumsden
18 Corton Place
Winnipeg, Manitoba
Canada
R2N 1W6

```
80 REM BURGLAR ALARM PROGRA
   !046
10 REM FOR THE TI HOME COMP
TER  !119
20 REM A PUBLIC DOMAIN PROG
AM  !074
130 REM WRITTEN BY R.A.LUMSD
EN- WINNIPEG,MANITOBA,CANADA
 !178
140 REM 85/11 HUG-TIBBS !093
150 ENDEL=1000 !179
160 EXDEL=1000 !189
170 SKIPD=1 !051
180 CALL CLEAR !209
190 PRINT "PLEASE REMOVE ALP
HA LOCK" !242
200 PRINT !156
    PRINT !156
    PRINT "PRESS  'C' TO CON
TINUE" !031
230 CALL KEY(3,N,N)!187
240 IF N=0 THEN 230 !232
250 IF N<>67 THEN 230 !230
260 CALL CLEAR !209
270 PRINT "PERIMETER CHECK(Y
/N)?" !099
280 CALL KEY(3,L,T)!192
290 IF T=0 THEN 280 !033
300 IF L=89 THEN 730 !030
310 IF L<>78 THEN 280 !026
320 CALL SOUND(1000,440,0,33
0,5)!116
330 CALL CLEAR !209
340 PRINT "UNARMED" !118
350 CALL JOYST(2,X,Y)!136
360 IF Y<>4 THEN 350 !049
370 IF SKIPD>1 THEN 400 !195
380 GOSUB 660 !230
390 SKIPD=SKIPD+1 !111
400 CALL JOYST(1,A,B)!083
410 IF B=-4 THEN 350 !027
420 CALL CLEAR !209
430 PRINT "ALARM TRIPPED" !0
21
440 PRINT !156
450 PRINT "ENTRY DELAY INITI
ATED" !084
460 FOR ENTRDEL=1 TO ENDEL !
167
470 NEXT ENTRDEL !164
480 CALL JOYST(2,X,Y)!130
490 IF Y=0 THEN 330 !088
500 FOR LOOP=1 TO 5 !045
510 FOR SIREN=700 TO 900 STE
P 10 !031
520 CALL SOUND(-99,SIREN,0)!
062
530 NEXT SIREN !023
540 FOR SIREN=900 TO 700 STE
P -12 !227
550 CALL SOUND(-99,SIREN,0)!
062
560 NEXT SIREN !023
570 NEXT LOOP !208
580 CALL CLEAR !209
590 PRINT "ALERT !!!!!!" !20
5
600 PRINT !156
610 PRINT !156
620 PRINT "ALARM TRIPPED" !0
21
630 PRINT !156
640 PRINT "PLEASE RESET" !20
4
650 END !139
660 CALL CLEAR !209
670 PRINT "EXIT DELAY INITIA
TED" !251
680 FOR DELAY=1 TO EXDEL !21
4
690 NEXT DELAY !005
700 CALL CLEAR !209
710 PRINT "ARMED" !209
720 RETURN !136
730 CALL CLEAR !209
740 CALL JOYST(1,A,B)!083
750 IF B=-4 THEN 320 !253
760 CALL SOUND(1000,-2,0)!00
9
770 PRINT "BREAK IN PERIMETE
R CIRCUIT" !153
780 PRINT !156
790 PRINT "PLEASE CHECK" !16
7
800 PRINT !156
810 PRINT "PRESS 'R' TO  REC
HECK      PERIMETER" !090
820 CALL KEY(3,K,S)!190
830 IF S=0 THEN 820 !062
840 IF K=82 THEN 730 !022
850 IF K<>82 THEN 820 !050
860 END !139
```

One of the most useful tasks you can set your computer to doing is "HOME CONTROL". Starting with this issue a series of articles dealing with the subject will be run.

The principles involved are fairly easy. Circuits which convert real world information into digital data are the base for HC projects. For example: to read the outside and inside temperature a simple sensor is wired to an input. The signal (an analog voltage) is converted to binary format. The number generated is fed to a running program which reacts with an appropriate action. Above a certain value, the computer would turn a fan on (or off), start the furnace going or close window shades. The inputs and resulting actions are limited by your imagination. With careful design you could have a system which answers the door, turns lights off & on, watches energy usage, monitor flood/water systems, sense lights (day/night conditions), give your house a sense of direction or even "watch" your pets, intruders, children or guests!

Using a bare console only, you can duplicate an alarm system costing much more! The TI has a mini A/D converter built into the joystick port - enough to return certain values to a monitor program.

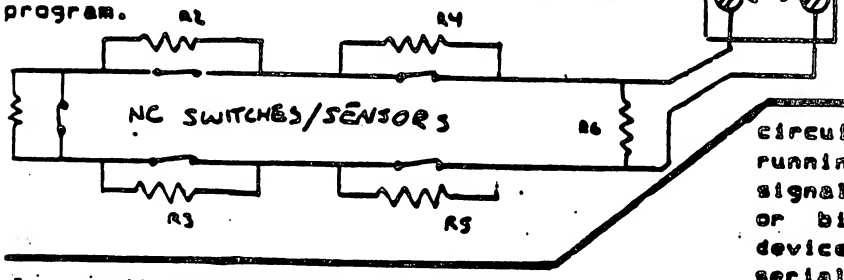

In reading an article by Forrest Mims in Creative Computing, he noted that joystick ports can be used for "computer driven" alarm systems. He mentioned the TI as one computer using a "rate" system of reading switch positions. Well, that IS the way it WORKS, but reality with the 4A is more complex than Atari, or Commodore machines. That joystick port is actually connected to the main I/O chip: the Programmable System Interface TMS 9901... the same chip which talks to the CPU 9900. In other words, the port can be used for INPUT and OUTPUT > some- thing other computers can't do. This chip handles the interface from the keyboard, joystick and other system

This is an area which is gaining more attention in various journals and books. Future articles will delve into REAL WORLD interfaces and circuits you can build. Data on a commercial unit is given at the end of the article.

The first circuit is given for using your console as a simple alarm system. Next issue (which will be published on Sept 1st) will cover circuits to add and basic software to operate the system.

Over the next six issues we will expand on this circuit, delve into more sophisticated systems and publish circuits for total home control. With luck we will show you how to have your system respond to voice control. "Maxfield, please turn off the yard lights."

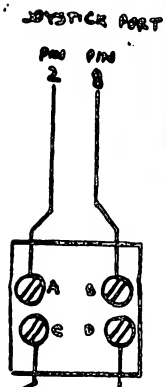

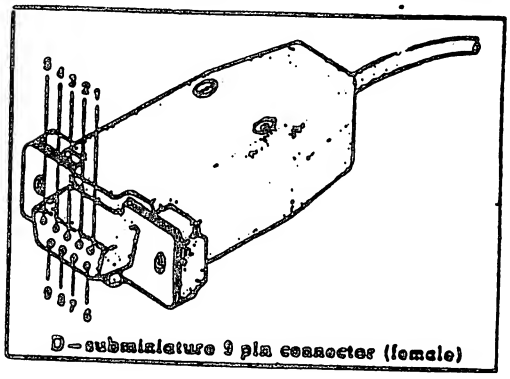

circuits. With the proper program running it would be possible to accept signals in an 8bit format: ASCII codes or binary data from home control devices which operate on TTL logic in a serial handshake manner. Remember the Joytalk project in HCM June-July 1983? Same principle. The joystick port is set up to scan an 8 x 8 matrix for the keyboard and joystick. This is why you can add a hardwired keypad like Dave Benne's. By the way, you can get further info from Dave by writing him at 228 NE 3rd ST., SATELLITE BEACH, FLORIDA 32937 USA. Send $2.00 and a self addressed large envelope and he will send you more data and keypad diagrams. Tell him if you would like to see a "REAL" keyboard for your console. Anyway, there are two low lines active driven by an 8 output open collector decoder with six lines to select the keyboard. Two of these lines are buffered to connect/select

ADD ONS FOR CONSOLE and SUPER E/A

The console modification will provide three added manual functions to the system.

1.) RESET: Allows reset of the CPU which in turn resets the rest of the system.

2.) LOAD INTERUPT: There are commercial screen dump programs that utilize this function to start the screen dump. Also has other uses to be discussed next month.

3.) HOLD: This switch lets you put the CPU on HOLD like many games.

Open up the console by removing the screws on the bottom of the console. Note how the door on the I/O port to the P-Box is installed. Then note how the power switch is assembled on the power supply. Remove the screws on the power supply and disconnect the power supply plug and set the power supply aside. Notice how the keyboard connects to the computer. Disconnect the keyboard. Remove the remaining screws holding the computer board to the top of the console. Remove the screws that hold the I/O port shield. Remove the screws holding the motherboard shields and remove the shields. The TMS/9900 chip is the largest and has 64 pins. On the non-component side of the motherboard locate the CPU. We are only interested in pins 4(LOAD), 6(RESET), and 64(HOLD). Solder a wire to each of these pins and bring them out through a convenient hole in the motherboard shield. Reassemble the the computer by reversing the disassembly process. The switches may be mounted on the console or brought out externally. Connect the RESET wire to one contact on the pushbutton. Solder the positive conact on the capacitor to this contact also . The negative capacitor contact is soldered to the remaining switch contact along with a wire that is run to a convenient ground connection. The shield is a good ground. Connect the remaining two switches to the remaining wires in the same manner. The diagram on the next page will help answer most questions.

SUPER E/A WRITE PROTECTION SWITCH

For many of you that have built or purchased the RAM expan d E/A cartridge, here is an add on that will allow you to protect your stored data.

1.) Cut the wire connecting pin 27 on the HM6264LP-15 and the cartridge edge connector. Install a SPST miniature switch in this line.

2.) Solder a 1000 Ohm resistor from pin 28 to pin 27 on the HM6264LP-15.

When the switch is closed, data may be written to the memory chip. When it is open the chip is WRITE PROTECTED.

INSTALATION OF RESET AND HOLD SWITCHES

One item missing from the 99 4a that seems to be found on most other computers is a simple reset switch. A the present time if hardware or software problems cause the console to lock up it is necessary to power down the console to return to the main screen. Instead of adding a switch TI used function "quit" to return to the master screen but this did not work after a lock up. A solution to this problem is to wire a STSP momentary normally open switch (Radio-Shack 275-47 or equivilent) to pin 6 of the 9900 chip and any board ground on the main processor board. Mount the switch at any convienient location (I have mine on the upper back of the console directly behind the grom port (there's room there for 3 or 4 items)

The hold switch I installed is a useful extra. What it does is put the computer on "HOLD",that is it stops whatever is happening on the computer until it is released. It does not kill the program, it just pauses it until you are ready to continue. One use I found is to (besides stopping a game to answer the phone) is to change printer functions midway though a printout (I can change fonts etc at the printer). All that needs to be done to add this super pause switch is to connect a SPST switch (Radio Shack 275-624 or equivilent) across the pins 1 and 64 of the 9900 processor chip (see below). I mounted this switch beside the reset switch previously described.

Both of these mods require removing the main board from the computer so if you decide to do one you might as well do them both at the same time. To connect the wires to the processor I just soldered each connection right to the leg of the chip on the top of the board. The whole project shouldn't take any more than a hour to complete.

CAUTION
Although my console has had these switchs added and I can see no way that they can damage anything I cannot assure anyone that the potential for damage is not there. Also if you use the hold switch do not activate it if a drive is running and then leave the computer unattended. The drive will not shut off until the computer tells it to, and since the console is on hold damage to the drive "may" happen if the drive runs for a long period of time.

GORDON BRADSHAW

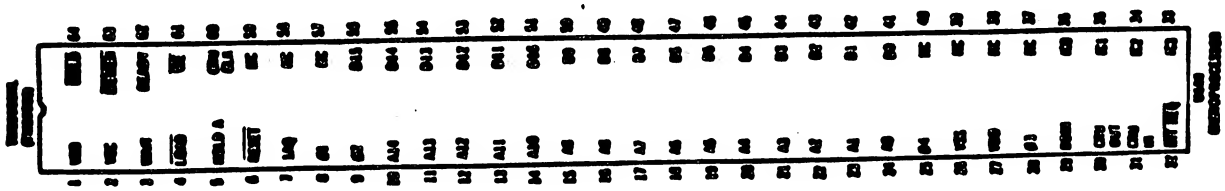

ADDING TO YOUR SUPERCART

by Jim McCulloch (4/1/86)

As almost any 99'er knows, a Supercart is a solid state command module for the 99/4A which includes an Editor/Assembler GROM chip and a battery backable CMOS static RAM memory chip, the HM6264LP-15 by Hitachi or other makers. With this module, you can have power-up menu access to any Assembly Language program(s) you feel like including, as long as the total size doesn't exceed 8K.

The full instructions for the construction of the battery backed Supercart were described very well in MICROpendium Magazine in the June, July and August 1985 issues by its inventors, John Cluley and Ron Gries of the New Horizons Users Group of Ohio. It has come to my attention, however, that several people have earlier versions of the Supercart without the battery backup circuit (such as described in one of the Ryte Data newsletters). For anyone who doesn't have access to the MICROpendium issues (everybody should; it's a good magazine for us 99'ers in spite of the controversial major advertiser), this article will describe the addition of the battery backup circuit. For those of you who already have this most useful feature, read the next sentence. Thanks to Mark Lopez who told me how he did it, this article also describes the construction of a manually bank switchable module with TWO HM6264LP-15 chips installed for a total of 16K user addressable memory (albeit 8K at any one time). Although much of the following may be "old hat" to many of you, it includes some information I haven't seen distributed widely and so I naively include it so that more of us can share any helpful information.

PARTS LIST

PARTS — QTY
SOURCE — PRICE

(For the battery back-up circuitry)

1N914 Signal Diodes (2)
  Radio Shack 276-1122 $0.99 for 10
1K Resistor-1/4 Watt (2)
  Radio Shack 271-1321 $0.39 for 5
2.2 MFD Tantalum Capacitor (1)
  Radio Shack 272-1433A $0.59 each
Jumbo Red LEDs (1)
  Radio Shack 276-0141A $0.69 for 2
Lithium 3V Energell Battery (1)
  Radio Shack 23-168 $1.79 each
Coin-Type Lithium Battery Holder (1)
  Digi-Key BH986-ND $1.25 each

(For the switchable second RAM chip capability)

HM6264LP-15 CMOS RAM IC (1)
  I.C.Express $2.95 each
1K Resistor-1/4 Watt (1)
  Radio Shack 271-1321 $0.39 for 5
SPDT Miniature Switch (Center Off) (1)
  Radio Shack 275-325 $2.19 each

(General Purpose)

Module Top 1853555-0197 (1)
  T.I.Parts Dept. $0.36 each
Module Bottom 1853554-0197 (1)
  T.I.Parts Dept. $0.38 each
Module Door 1815723-0057 (1)
  T.I.Parts Dept. $0.04 each
Door Spring 1815728-0001 (1)
  T.I.Parts Dept. $0.05 each
P.C.Board (2 sides) 1815721-0004 (1)
  T.I.Parts Dept. $3.60 each
E/A GROM Chip 1815768-1204 (1)
  T.I.Parts Dept. $3.60 each
(?C1?)Capacitor .1UF 50V 1501701-0122 (1)
  T.I.Parts Dept. $0.14 each
Screw 1818685-0034 (1)
  T.I.Parts Dept. $0.02 each

Radio Shack stores are generally ubiquitous. Digi-Key may be addressed at: P.O. Box 677, Thief River Falls, MN 56701-9988 or at 1-(800)-344-4539. I.C.Express can be addressed at: 15338 Valley Boulevard, City of Industry, CA 91746 or at 1-(800)-972-0997 ($10 minimum order). T.I. Parts Dept. can be reached at their new (1986) phone number at 1-806-741-3864 (Credit Cards useable and get faster response).

(See Figure 1 at end)

First of all, to open a module, unscrew the screw on the bottom cover. Then using a flat bladed screwdriver, pry the retaining lugs to be encountered in the bottom slots outwards. If you leave the foil label on the front of the module, it will act as the hinge of the clam shell thus formed, keeping proper alignment. You will probably find that the spring and door assembly are located on the top part of the module case. In some cases it's easier to reassemble the module if the spring and door are on the bottom. If you pinch the spring together (like a hose clamp), it will enlarge enough to fit over the larger post on the bottom module cover and the door fits in as before.

If you have an older style Supercart without the battery back-up circuitry, you may notice that pin 28 of the RAM chip is connected to the right hand side of the foiled hole F3. This is the +5V supply as it is supplied from the console via GROM port extender pin 19 (on the underside of the Printed Circuit Board). In keeping with the MICROpending instructions, the foiled holes at both F3 and F1 should be electrically separated by scraping away the connecting foil. The C1 capacitor (the one which came installed on the board) should be moved to the right handed holes of F3 (which is +5V from the console) and F1 (which is Ground) if it isn't already there.

There should be a wire connecting RAM hole 28 to the left handed hole of F1 (as well as a connector from RAM

pin 28 to RAM pin 22 and a 1K resistor between RAM pin 28 and another part of the board.) The LED has a flattened side; the wire on this side should be connected to the left hand side of F3. This will supply + voltage to keep the CS2 pin of the RAM chip (pin 26) at a high voltage state which is needed for proper operation. To this wire in the left hand side of F3, connect one lead of a 1K resistor (R2 in Figure 2). The other end of R2 connects to any one of the Grounded foiled holes around the periphery of the board. The lead of the LED opposite the flattened side should be connected to any of the +5V holes available on the board; this may include the right hand side of F3 or any of the bottom right GROM holes as shown in Figure 2.

Somewhere on the board, you should make an electrically isolated hole; if you remove the 1K ohm reset resistor between F2 and R8, then the F2 hole is easily available by scraping away its foil connection with the rest of the board. Into this hole, solder a short length of stiff wire; to this terminal you will be soldering four other connections. The first of these four connections is the dark banded end of a diode (D1 in Figure 2); the other end of D1 is connected to a +5V supply hole, such as at the bottom right side of the right-most GROM socket. This will supply the +5V to activate the RAM chip and enable it to be written to. The second connection to F2 is one end of a 1K resistor (R3 in Figure 2). The other end of R3 should be soldered to the dark-banded end of another diode (D2 in Figure 2). The other end of D2 should be connected to the positive lead of the Lithium battery holder. (Soldering directly on Lithium batteries should be discouraged since there are reports of these types of batteries EXPLODING when subjected to heat or charging currents. The diodes in this circuit are apparently used to prevent such currents.) The third connection to F2 is the + lead (it's marked) of the Tantalum capacitor (C2 in Figure 2). The other lead of the Tantalum capacitor should be connected to any of the grounded holes around the periphery of the board. This is to "isolate" the power source. To any of the grounded holes available around the periphery of the board should be connected the negative lead from the Lithium battery holder. The fourth and final connection to F2 is a wire, the other side of which connects to Pin 28 of the RAM chip (disconnect any previous wiring from it to F3). Wrap any exposed wiring with electrical tape to prevent short circuits. I drilled a 1/4" hole in the front label side of the cartridge to let the LED shine through; it's not absolutely needed for correct functioning but it's a nice touch. Voila, this should do it for the battery backed circuit!

(See Figure 2 at end)

Adding a Second RAM Chip

This section describes how I added a second RAM chip by piggybacking it on top of the first. However, this makes the chip pile high enough so that the module cover will not close over it. Accordingly, I had to remove a small section of the top module cover (about 1 by 2 cm.) right at the point where it takes a couple of right angle turns. This is where the module narrows so that it will fit into the cartridge slot of the console. Since the chips take up some of this space, this "souped-up" Supercart needs to reside in a midgit or other cartridge expander (it even works well in a 32K). To do the actual cutting of the module cover, I used an old soldering gun which had a plastic cutting tip but I suppose anything from drills to hot wires could be used also.

The Hitachi HM6264LP-15 is a 28 pin chip of which one pin is not connected, two pins are concerned with power supply (ground and +3-5V input), and 21 pins of which are address and data lines. This leaves 4 pins left over which control the functions of the chip. Pin 27 is the WE or Write Enable pin which determines whether the chip will be written to or read from and is controlled via the wire connected to edge connector 3; if the voltage to this pin is in a high state (+ voltage) then the chip's memory will be available to be read from whereas if it is low (0 voltage or grounded) then a write to memory is expected. Pin 26 is the CS2 pin which seems to act as a sensor as to whether power is applied or not; if this CS2 pin is at a low (0 voltage or grounded) state, then none of the chip's memory functions are accessable. This is why it is fed a continuous high voltage state via the LED which is connected to the +5V supply from the console (the left hand F3 hole connects with pin 26). Pin 22 is the OE pin or data bus in and I'm not entirely clear as to its meaning. However in this system, if this pin is at a high voltage state, output from the chip is disabled and if it is at a low state (0 voltage or grounded) then read and write functions can be done. The last of the four control pins is pin 20 or CS1 or chip select pin. When this pin is supplied with a high state (+ voltage) the entire chip pretends that it isn't there (it's "deselected"). When this pin is at a low state (0 voltage or grounded) then it gets the message that it has been "selected" by the rest of the system to converse with and its functions are enabled. If you look at the inside of a 32K or Horizon Ramdisk which both use piggybacked 6264LP-15s, you will find pins 20 bent out with individual wires connecting them to the board; this is the way each chip is selected or deselected.

The above paragraph is probably boring and inaccurate but it helps to explain the circuitry necessary to add another RAM chip to the pile. It's relatively simple to piggyback another RAM chip on top of the first; bend in the pins to make a tight fit over the lower chip's pins by molding on a table top, then bend out pins 1, 2, 20, 27, and 28. Then solder the pins from the top chip to the bottom chip being careful not to make any solder bridges between adjacent pins. (In my module, I actually soldered the two together before I installed it on the board.) Pin 1 is ignored. Pins 2, 27, and 28 are connected to the same wires as supply the corresponding pins on the lower chip. If you connected all of the pins of both chips in parallel, you would have both chips doing the exact same thing - clones of each other. How do we give each chip its individuality? This is where the CS1 pins (pin 20) become useful. A "pullup" resistor is used to supply + voltage (a high state) to pin 20 of the chip not being used which as we read in the above paragraph has the effect of making that chip "invisible" to the system. In the absence of such a "pullup" resistor and + voltage source, these pins would tend to "float" down to a 0 voltage state which would

cause the system to "select" both chips at once. This would cause the system to read the same address of both chips simultaneously which would result in garbage and a probable crash. In the Supercart board, there is a resistor (R1) which acts as such a pullup resistor. In the version described for use in cartridge expanders, this R1 resistor is connected between CS1 (pin 20) and the +5V line from the console. This supplies a high state to deselect the chip. How then is the chip selected to enable it to do its thing? This is the function of the wire connecting pins 20 and 22 (the OE pin). When the OE pin is made a low state (0 voltage) then pin 20 is also made low since the resistor supplies voltage less readily than the direct connection to pin 22 "takes it away". To enable us to use both chips independently then, we could use a switch to connect the OE (pin 22) line to either of the RAM chips pin 20 while having pullup resistors connected to both pins 20 to keep the other chip deselected while the one chip is working.

This is exactly what I did: disconnect any wiring between pins 20 and 22 (to be found on the lower or older chip); next connect 1K resistors (R1 in Figure 3) between pin 20 and the +5V line for both the top and bottom RAM chips; next run wires from pins 20 of both the lower and upper chip to the outer terminals of the SPDT switch; then connect the center terminal of the SPDT switch to the OE pin with another wire (if you're tired of soldering on chip pins by now, you could run this wire to edge connector 2 which is the same line).

I then drilled another 1/4" hole in the front (label) side of the cartridge (somewhere on the left hand side to keep it away from the chips) to install the switch in. If the spring and door of the module cover have been moved to the bottom cover, it makes it easier to insert the modified board back into the module. Again, wrapping any exposed wires helps to prevent short circuits (in one of my earlier efforts, smoke rewarded me when I powered up the Supercart!) I finally used black electrical tape to wrap around the module and cover up the hole I'd made in the top cover. Voila, a manually switchable extra bank of useable memory! Now I can choose between 2 different entry menu screens simply by flipping the switch.

One other potentially useful feature I've found is this: with my previous single banked Supercart, I would more often than not scramble the memory if I removed the cartridge or inserted it with the console power on. (In retrospect, this is because the chip was hardwired to be constantly selected and was subject to transients and "spinal shock" when connected and disconnected.) Now if I "deselect" both RAMs by placing the switch in the center position, I can remove and insert the cartridge even with console power on without losing Supercart contents. To run, however, one or the other of the RAM chips has to be selected.

I hope these comments have been useful to any other "technoklutzes" beside myself out there. If anyone has any corrections or comments to make, I'd be pleased to get them at: Jim McCulloch, 9505 Drake Avenue, Evanston, IL 60203-1107 (CIS ID# 74766,500).

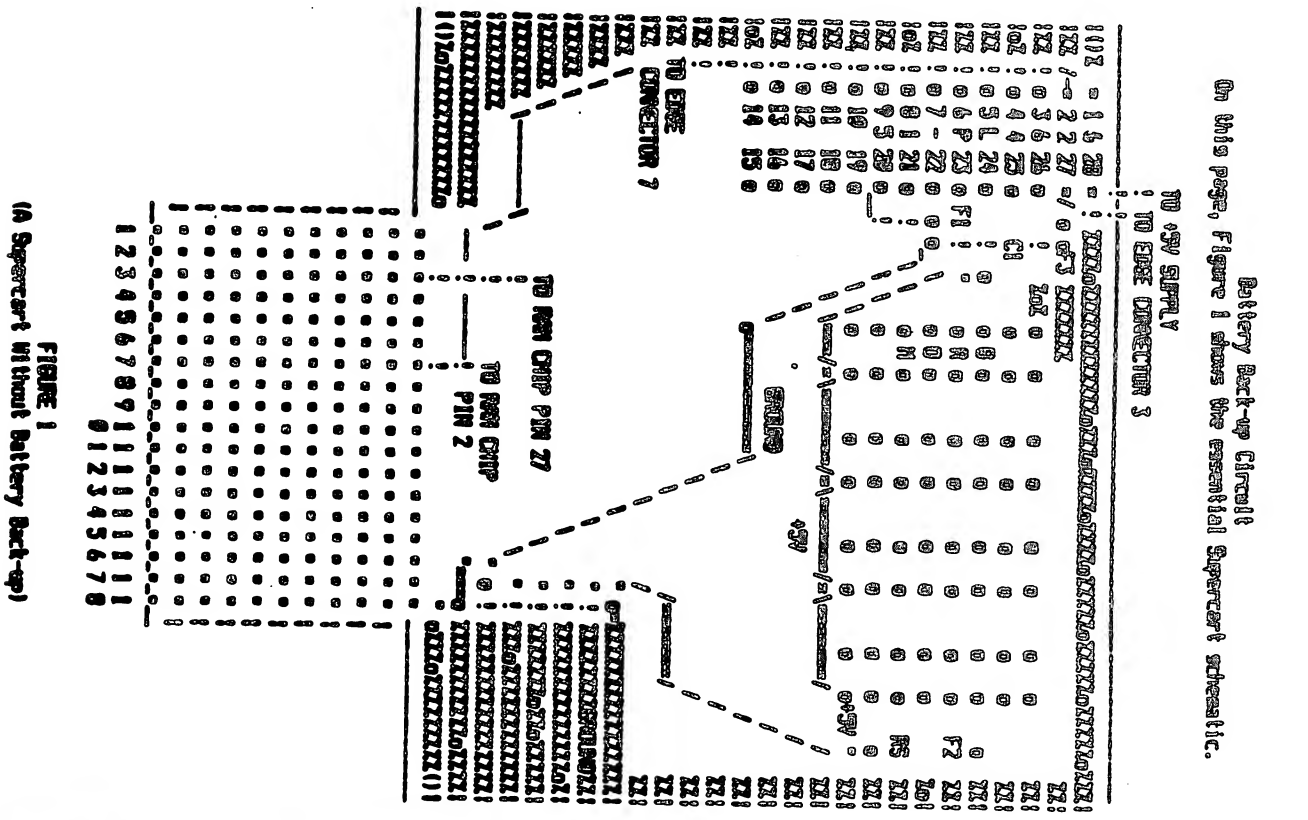

Battery Back-up Circuit
On this page, Figure 1 shows the essential Supercart schematic.

FIGURE 1
(A Supercart Without Battery Back-up)

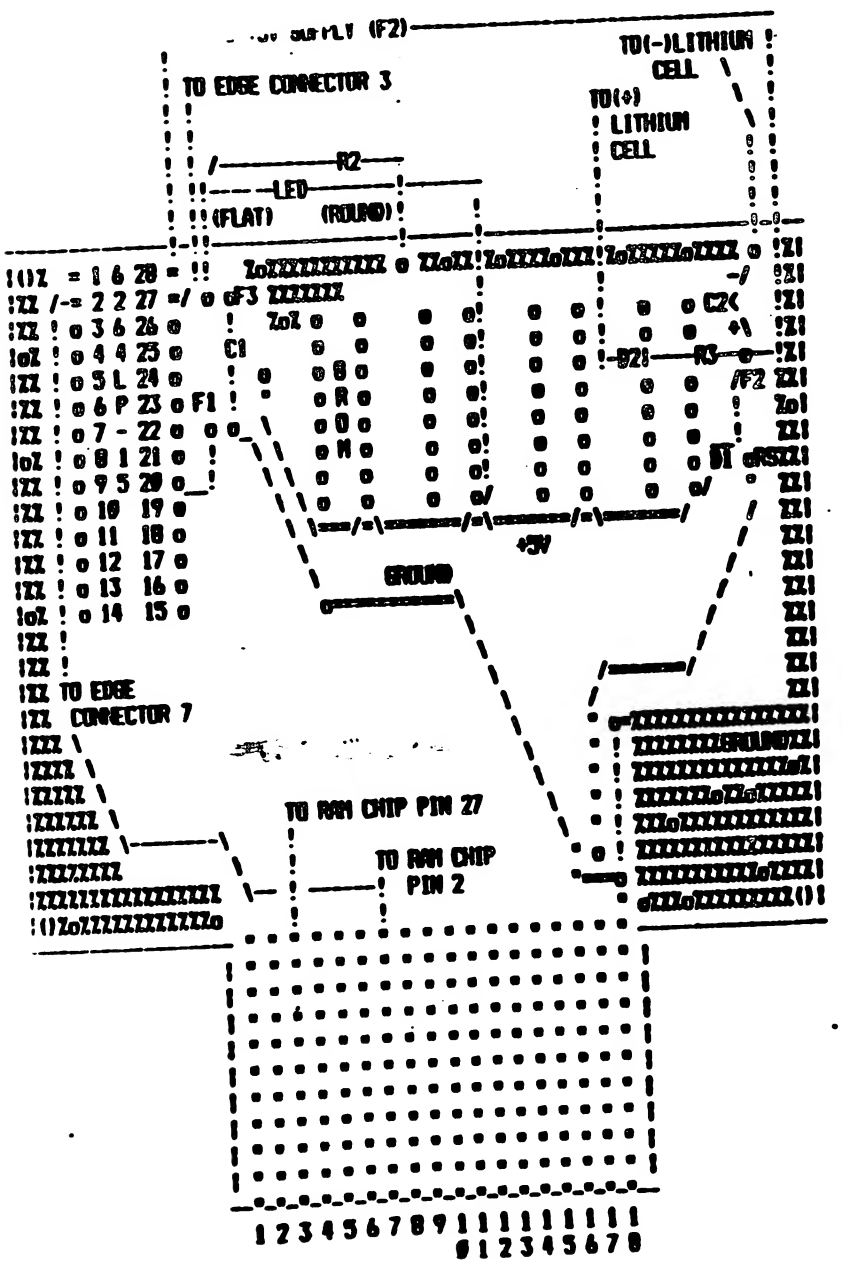

FIGURE 2
(Supercart With Battery Backup Circuit)

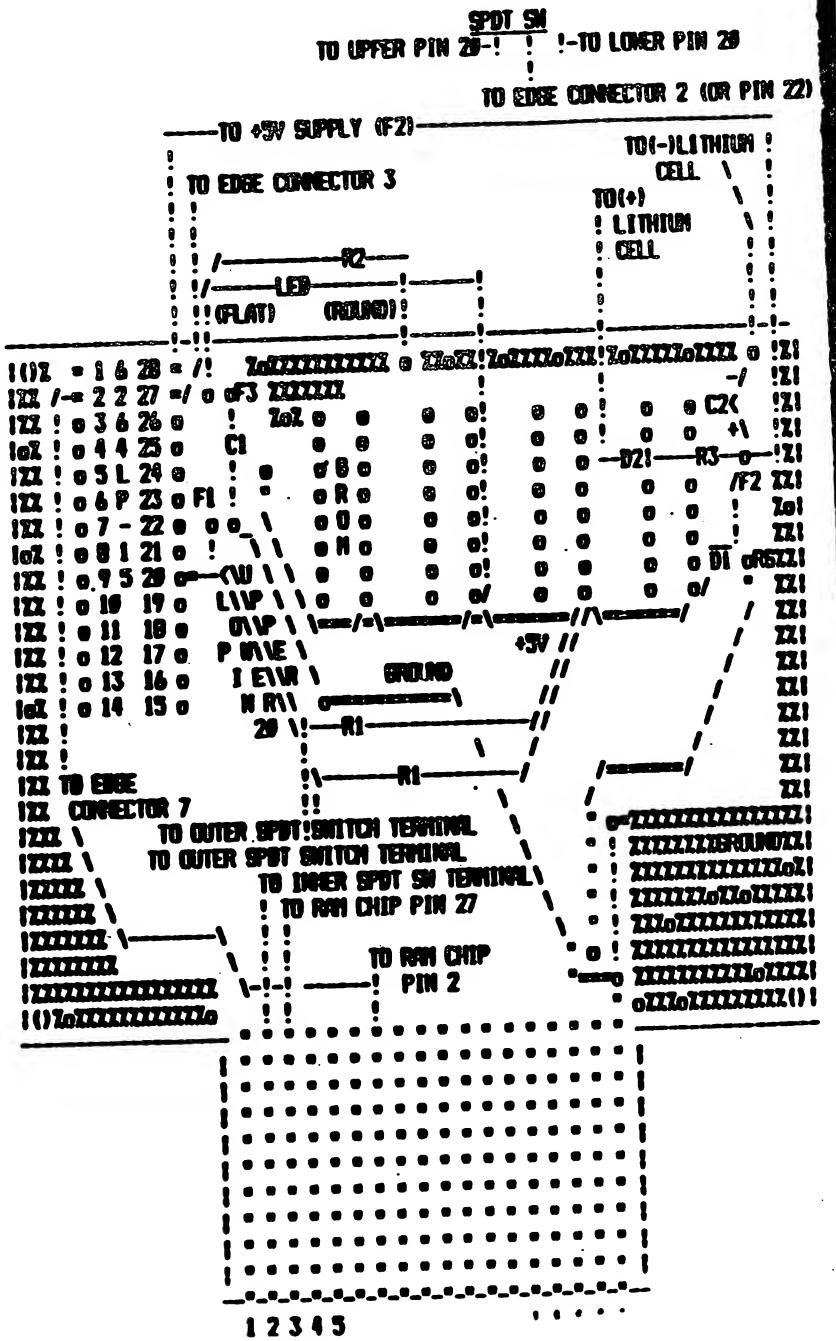

MORE FOR YOUR MODULE. . .

Expanded from an article by Jim Ellis Raleigh, North Carolina
By: Dave Ratcliffe, Harrisburg Pa.

The purpose of this tutorial is to show you how to place more than one program in one command module. I have used it to put TI-WRITER into my EDITOR/ASSEMBLER module and will soon add DISK MANAGER 2 to the same module. If you have a WIDGET (ta) then you will, in effect, have room for up to 5 module based programs available at the flick of a switch. A word of caution before continuing... This project requires some experience in handling CMOS and other static sensitive devices and a knowledge of soldering techniques. If you do not have this knowledge or experience, DO NOT TRY THIS PROJECT! Damage to or destruction of your modules can result!

WHAT YOU WILL NEED:

1 SPST switch (RADIO SHACK #275-407 or equiv.)
Approx 6" ea. of RED, YELLOW and BROWN stranded wire (colors may be different, not important)
1 Phillips Head screwdriver
1 soldering iron (27 watt or lower)
1 static protection kit (or a lot of clip leads)
1 solder vacuum of any type
1 X-acto knife
some patience... and away we go!

Decide what module you are going to modify (suggest you use either TI-WRITER or the E/A modules since they have only 1 GROM each). Remove the screw from the back of the module and place it where you won't lose it. Using the flat-blade screwdriver, carfully pry the catches at the corners of the module outward. The module should now pop open. Make sure you are using your static protection kit at this point. The ground clip should be attached to the 1st edge track from the left with the card laying as in the illustration.

The cards in these modules have had all pads soldered whether there was a chip installed or not so you will have to de-solder the pads for the position you will be using for your "transplant". Consider the first 2 rows of pins on the left as position #1, the next set as #2 and so forth. The E/A GROM is in position #2 so I opened the holes in posiion #3 for the TI-WRITER GROM so these instructions are based on this choice.

Now open the module you will be taking your "transplant" from. Switch your grounding kit clip to the 1st edge track from the left and carfully un-solder the GROM from the board. Remove the GROM chip from the card taking care not to bend any pins. ONCE THE CHIP IS REMOVED FROM THE CARD IT IS VERY SUSCEPTIBLE TO STATIC DESTRUCTION!

With great care, install the chip in the other card at position #3 making sure that it is positioned properly (pin #1 upper left with edge connector towards you). Place the grounding clip on this card and solder the chip into place. Be careful not to subject the connections to prolonged heat as this can damage the chip internally. Using your X-acto knife, cut the lands at the following positions:

Pin 14 between position #1 and #2
Pin 14 between position #2 and #3
Pin 14 between position #3 and #4

MORE FOR YOUR MODULE (Cont.)...

Make sure your cuts are clean and complete. Now lay the card aside until the switch has been installed.

Install your selector switch at the label end of the module shell-half with the 'bulge' in it. Referring to the accompanying TI-ARTIST picture file, consider the pins of this switch as designated 1 to 3 (left to right with the shell placed bulge down, open edge towards you). Solder approximately four and-a-half (4 1/2) inches of wire to each switch terminal.

Place the modified card on your work surface oriented as in the drawing. Route the 3 wires through the hole in the circuit card at the upper left hand corner. CAREFULLY solder the wire from pin #1 of the switch to the indicated position on the circuit card. DO NOT EXPOSE THESE CONNECTIONS TO EXTENDED PERIODS OF HEAT. In the same manner, attach the wires from pins 2 and 3 to the card at the indicated positions.

Cut another piece of wire approx. 4 inches long. Solder it to the circuit card at the positions indicated as 'JUMPER WIRE'. This completes the electrical portion of the project. Carefully examine the board and make sure you have made good solder connections and that there are no 'bridges' between pads on the card.

Now you can re-assemble the module shell. Be sure to place the pressure spring and edge-connector cover properly in place, then snap the two halves back together. Now it's time to see if you screwed up.

Fire up your console and shove the cartridge into the grom port. Press any key and you should see the 3 item menu that comes on all modules. If not, fall back and punt (check your wiring). If you have made it this far, remove your cartridge, move the selector it's selecto switch to the other position and re-insert the cartridge. After pressing any key, you should see the 3 item menu for the other progras in your module. If you have made it this far, congratulations, you are finished. If not, you will have to check your wiring carefully. If it is still not working, there is a good chance you have blown one or both of the chips. In this case, punting won't help, but you may want to kick something anyway.

By adding yet another switch to the module housing and running a wire from switch #1 (old switch) pin #1 to switch #2 (new switch) pin #2. Adjust the rest of the directions above accordingly and you can really have fun!

Enjoy yourself with this project and if you blow out an E/A Grom chip, remember TRITON sells the whole package for $29.95!

DIAGRAM ----->>

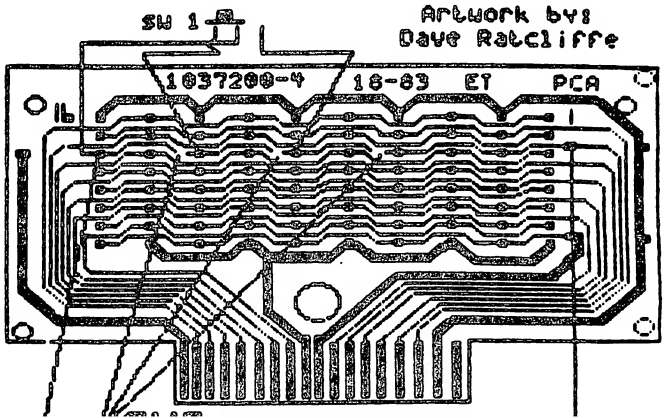

PARTS YOU WILL NEED:

4-16 PIN LOW PROFILE I.C.SOCKETS
2-SPDT MINIATURE TOGGLE SWITCHES(S2,S3)
1-N.C.MOMENTARY,MINIATURE PUSHBUTTON SWITCH
6-10" LENGTHS OF THIN STRANDED WIRE

ASSEMBLING YOUR MODULE:

1)GET YOUR 4 MODULES THAT YOU WANT TO PUT IN ONE MODULE.(i.e.DISK MANAGER,EDITOR ASSEMBLER,T.I.WRITER AND YOUR ADVENTURE MODULE)

2)REMOVE THE CHIPS FROM EACH MODULE BY DESOLDERING.BE CAREFUL NOT TO OVERHEAT THE CHIPS OR TO BREAK THE TRACES ON THE BOTTOM OF THE BOARD.

3)REMOVE C1+C2(FIG.1) FROM THE BOARD YOU SELECT AS YOUR NEW BOARD AND MOUNT THEM ON THE TRACE SIDE OF THE BOARD.THIS MAKES MORE ROOM FOR THE SWITCHES ON TOP.

4) ON THE CHIP SOCKETS(FIG.2),BEND OUT PIN 14 SO THAT IT COMES UP ALONG SIDE OF SOCKET.YOU DON'T NEED TO USE SOCKETS,BUT I USED THEM SO THAT I COULD INTERCHANGE CHIPS IF I WANTED TO.TO NOT USE SOCKETS ,JUST BEND OUT PIN 14 OF THE CHIP ITSELF.DO THIS C A R E F U L L Y.

5)NOW INSTALL THE SOCKETS IN THE FIRST FOUR LOCATIONS NOTING THE POSITION OF THE NOTCH AS IN FIG.4.

6)SOLDER A 10" LENGTH OF WIRE TO PIN 14 OF EACH SOCKET.

7)REMOVE THE END OF R1(FIG.1) WHICH IS CONNECTED AT POINT A.SOLDER 2 PIECES OF WIRE TO THE HOLE AT POINT A.SOLDER A WIRE TO THE END OF R1 WHICH YOU REMOVED FROM POINT A.INSULATE YHIS CONNECTION.

8)IT'S TIME TO MOUNT THE SWITCHES INTO THE CASE.YOU NEED TO BE ABLE TO SWITCH TO 1 OF 4 OF THE WIRES AT PIN 14.IF YOU COME UP WITH SOME OTHER SWITCHING ARRANGEMENT PLEASE FEEL FREE TO USE IT.OTHERWISE THIS IS HOW I DID IT.

9)DRILL HOLES AND MOUNT THE SWITCHES IN THE CASE.MOUNT THEM AS CLOSE TO THE SIDES OF THE CASE AS POSSIBLE(S2+S3).S1 SHOULD BE MOUNTED TO THE BACK END OF THE CASE.SEE FIG.8.

10)HOOK UP THE WIRES AS IN FIG.6.TRIM WIRE LENGTH AS NEEDED.

11)PLUG YOUR CHIPS;WHICH YOU REMOVED FROM EACH MODULE;INTO EACH OF THE SOCKET LOCATIONS.ENSURE THAT PIN 1 OF THE CHIP GOES INTO PIN 1 OF THE SOCKET.

NOTE:

IF A MODULE HAS MORE THAN 1 CHIP,YOU CAN STACK THEM UP ON TOP OF ONE ANOTHER AND WHEN THAT IS TOO HIGH TO FIT IN THE CASE JUST MOVE THE REST TO THE NEXT SOCKET LOCATION.ALL PIN 14'S ARE TIED TOGETHER OF THE ONE YOU STACKED
THE CHIP #'S MUST BE IN ASCENDING ORDER AS IN FIG.7.

OPERATION:
PUT SWITCH ON OF DESIRED MODULE AND PRESS RESET.DO NOT HAVE MORE THAN ONE SWITCH ON AT A TIME.LABEL SWITCHES AFTER DETERMINING WHAT IS ON IN EACH POSITION.

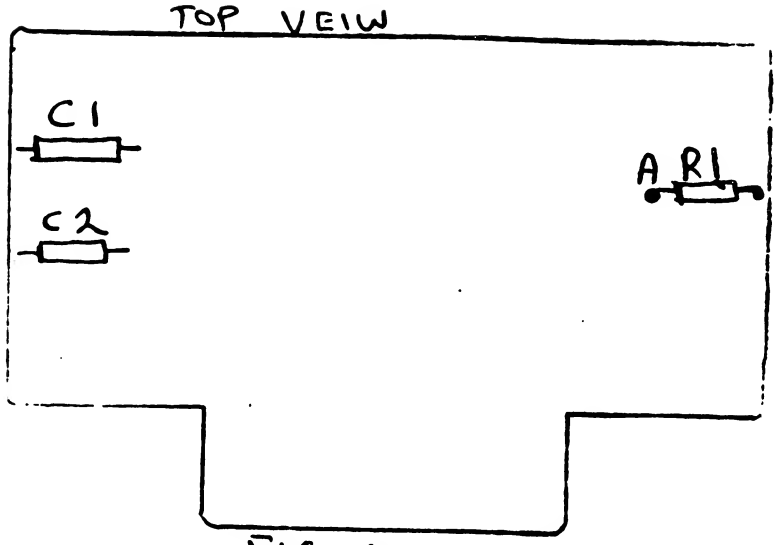

FIG. 1

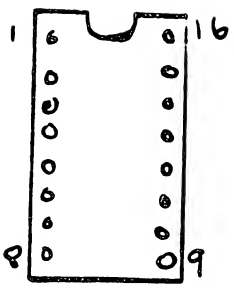

I.C. SOCKET

FIG. 2

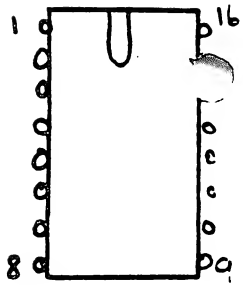

I. C.

FIG. 3

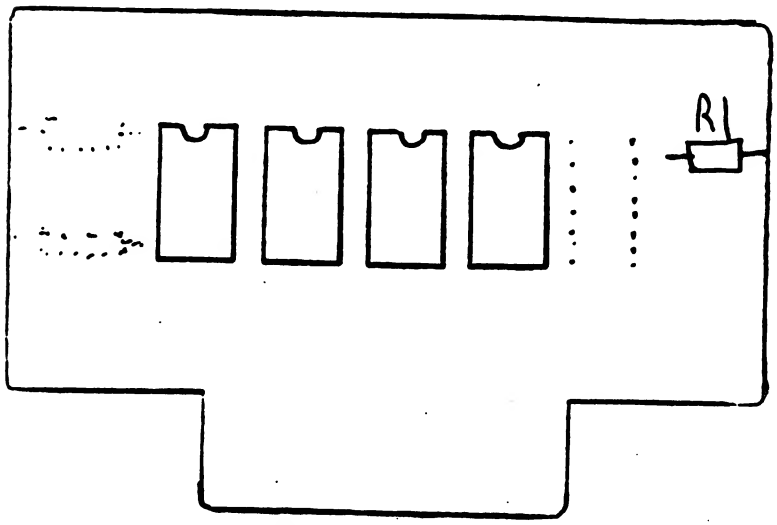

FIG. 4

IF THERE ARE 5 CHIPS

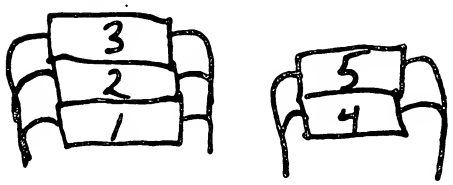

FIG. 7

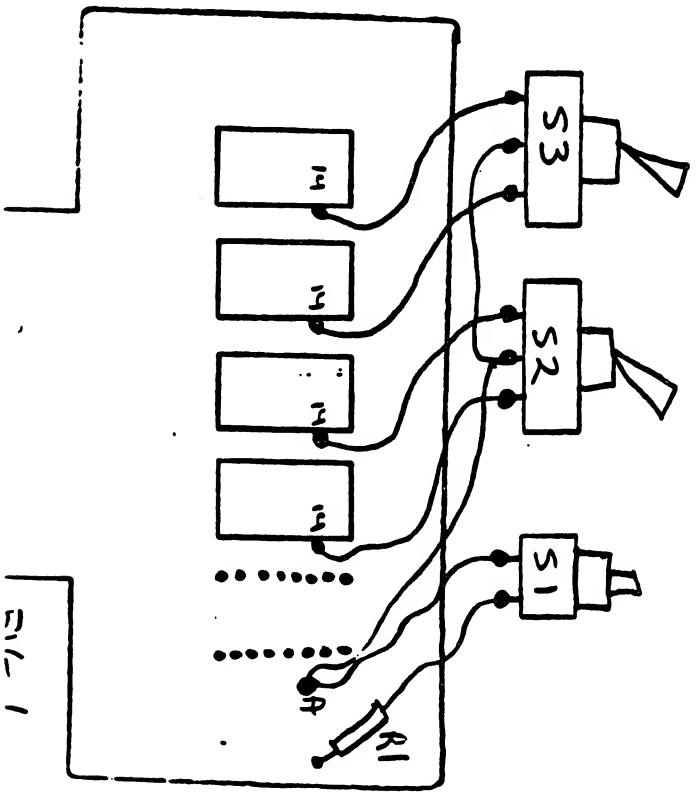

FIG. 1

FIG. 8

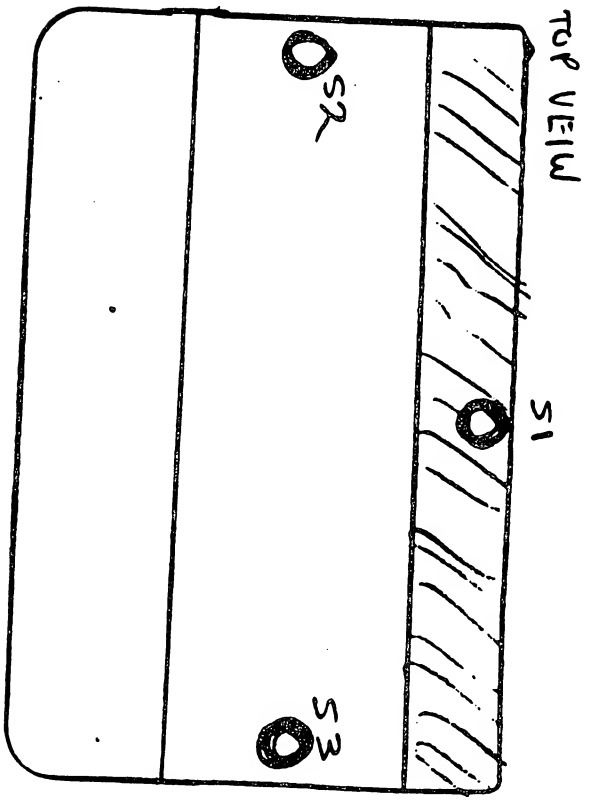

the supercart articles you could use I have decided to give you one more. The part of this modification that makes this one unique is that I have used parts from several articles and combined them into one module. The parts are basicly the same as other carts except I have made modifcations to use sockets for all chips and an optional built in reset switch. I have included enough information to add a second ram chip and a socket to put in your Disk-manager chips or Ti-writer.

The start of all supercarts should begin with the reading of the article by JOHN CLULOW in micropendium. This article has been reprinted in many newsletters including our WEST JAX 99'ER NEWS JULY 1986. John explains all the basics used in construction of the module.

Lets start with preparing the board to accept all the componants and the sockets. Break the foil between the the two adjacent holes at F1 on the top of the board and the two holes at F3 on the bottom of the board. At the other end of the board where the reset resistor was removed locate the hole that would be number 16 if a grom chip were to be installed in the last set of holes. Isolate this hole by cutting the foil around it. Call this hole F2 and use it for the connection of D1,C2 and R3.

Remove the section of ground strip at the top of the boards where the old rom chip was removed. Also at this end of the board remove the circuit trace that connected to rom pin 7. This hole will become ram pin 9.

You will find there are many places on the board to make connections. If you trace a connection to another location on the board feel free to use it only double check it before you test the module.

second grom chip locate grom pin 14 on the next set of grom chip holes. Isolate this solder pad by cutting the foil as in the top view of the pc board. Separate edge connector 30 by cutting the foil at the top of the connector. Remove enough of the foil to ensure there is no possibility of shorting the wire soldered to this edge connector later. This is the last foil cut on the top of the board.

On the reverce side locate the ground strip section at the top of the rom chip holes. Cut this foil and the section of foil at the top of edge connector pin 29 as shown in the bottom view of pc board. Double check the two holes next to rom pin 24 to ensure that only the one closest is connected.

Set your 28 pin socket in place and mark the location of the extra four pins at the top of the board. Drill or use some other means of putting these holes in the board. Do not worry if you make the holes a little oversized we will be connecting wire to the socket later.

We are now ready to install our components. Install the sockets in the board with the number 1 pin at the top of the board. Replace C1 in the holes outboard of the two it was removed from. Bend the leg on the flat side of the led 90 degrees and solder it into the hole next to F3 and the other leg to C1. On the bottom side of the board connect R1 (1K) to the leg of the led put through the hole. Connect the other end of R2 to any ground pad. If you are useing two ram chips connect two 1K resisters to F4.(this pad allso connects to F3) One will connect to pin 20 of the socket and the other to pin 20 on the upper ram chip.

hole marked F2. You can make the other connections at F2 to this diode. The other end of D1 solders into the hole at the bottom right grom location. This would be grom pin 9 as shown in figure 1. Connect the positive lead of C2 to F2 and the other lead to ground. Solder the banded end of D2 to R3(1K) then connect the other end of R3 to F2. Connect the free end of D2 to the positive side of the battery holder or if you are not using a holder connect a short length of wire to the diode for use later.

On the bottom of the board connect a length of wire from F2 to socket pin 28. Connect a jumper to replace the section of ground foil we removed at the top of the board. Solder a wire from ram pin 9 to grom pin 11 or card edge connector 23. Connect a wire from ram pin 27 to card edge connector 32 on the top of the board. Solder a wire from ram pin 2 to card edge connector 24.

It is now time to make connections to our switches. Cut six lengths of wire approximately four inches long and one two inches in length. Starting with the double pole double throw switch with center off we connect one wire from the center leg of the switch to edge connector 29. The other center leg will connect to edge connector 34. Solder a wire from grom pin 14 on both sockets. Each of these wires will connect to the side of the switch that has been connected to edge connector 29. Connect the two inch long wire to the other side of the switch making sure you connect it to the same end of the switch as grom chip enable wire is connected for the socket you wish to use for your E/A chip.

Solder a wire to each end of your single pole double throw switch then connect one of these to ram pin 20 on each ram chip.

The two inch long wire connected to the center leg of the DPDT switch connects to the center leg of the SPDT switch.

If you wish to add the reset switch to the module I would suggest the components on the right end of the board be installed on the bottom of the pc board. Connect one lead to edge connector 29 and one side of the switch. Connect the other side of the switch to the reset resistor (100 ohm) removed from the pc board. The other end of resistor is soldered to a short length of wire and it is then soldered to the solder pad connected to edge connector pin 1.

Insulate the top of the board with electrical tape in the area that the switches will be mounted. As an added precaution wrap the switches with tape allso. Depending on the size of your switches a good place to install them is on the top of the module near the center of the hump. If you find micro switches small enough they can be mounted through the front of the module. This location would be the ideal place if you can fit them in. The two ram chips are soldered together one on top the other. All pins are connected except pin 20 on the upper chip it is bent out away from the lower chip.

It is now time to test your module and after double checking your board for solder bridges and proper placement or orientation of componants. DO NOT install the battery until you have tested the module and are satisfied all is correct. The easiest method of testing is to use CALL LOAD as in JOHN CLULOW'S article. Cut the case for clearance around the ram chip stack and for the led. I won't go into all the testing you could do to the module for this is very well covered by John and the other articles I combined to construct this module. I would like to give credit to Richard J. Bailey of the NW99ER USER GROUP , Jim McCulloch of Evanston, IL , and an article written by Dave Ratcliffe in which he is expanding on an article by Jim Ellis of Raleigh, North Carolina.

WARNING!!! As with any project of of this kind I nor the WEST JAX 99'ERS are responsible if you blow any chips or damage your computer in any way. PROCEED AT YOUR OWN RISK

*NOTE: I used a wirewrap socket for the second chip and raised it to the outside of the module. In this way I could change the grom chip without opening the module.

HM6264LP-15 CMOS RAM	(2)
TI GAME MODULE	(1)
1N914 SIGNAL DIODE	(2)
1K RESISTER	(4)
2.2 µf TANTALUM CAP.	(1)
RED LED	(1)
LITHIUM CELL	(1)
CELL HOLDER	(1)
16 PIN SOCKET	(2)
28 PIN SOCKET	(1)
DPDT SWITCH CENTER OFF	(1)
SPDT SWITCH	(1)
NC MOMENTARY CONT. SW	(1)

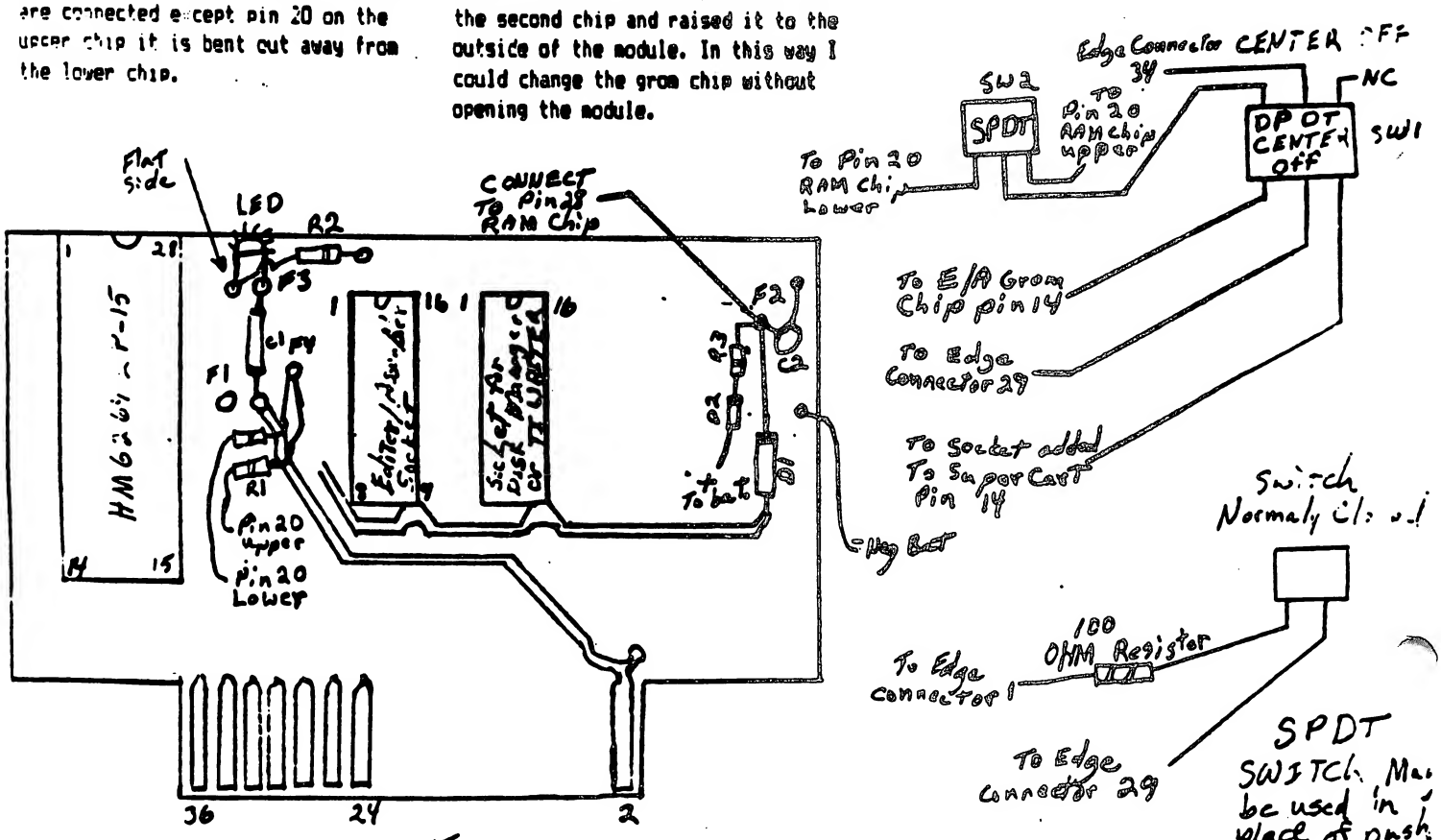

Figure 1

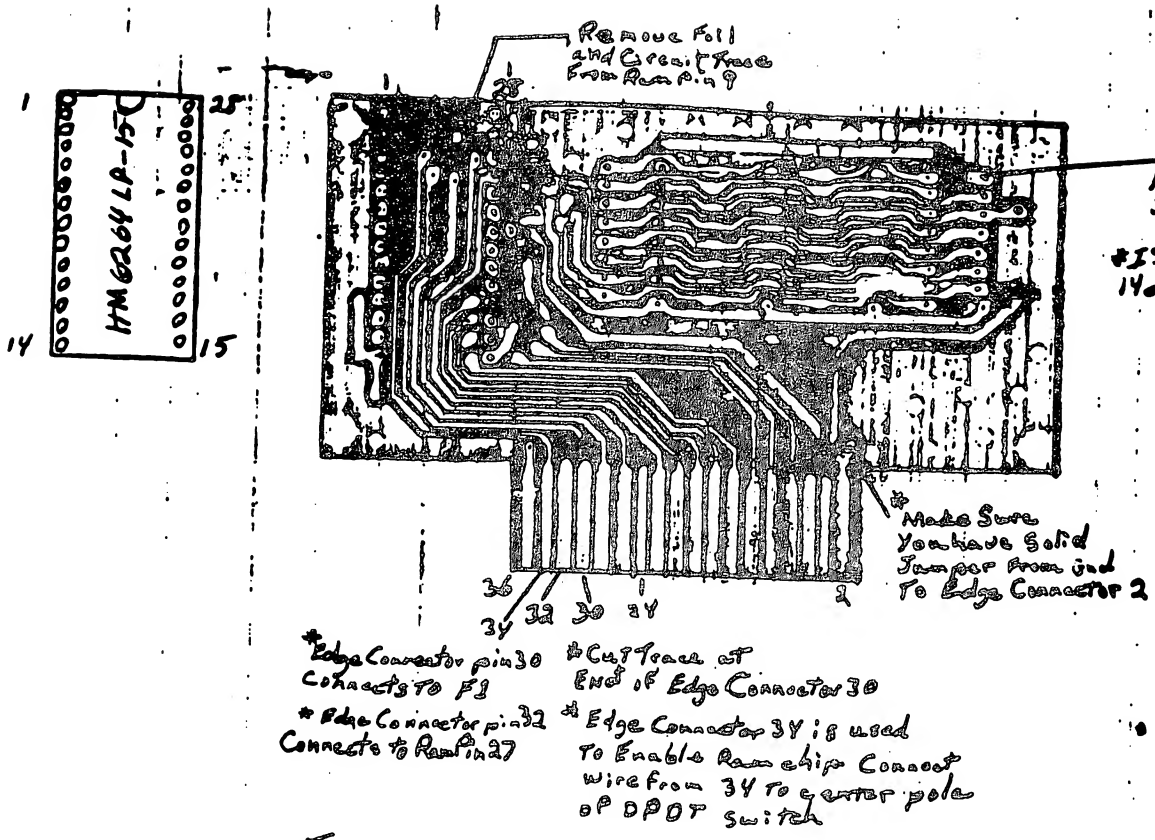

Top View

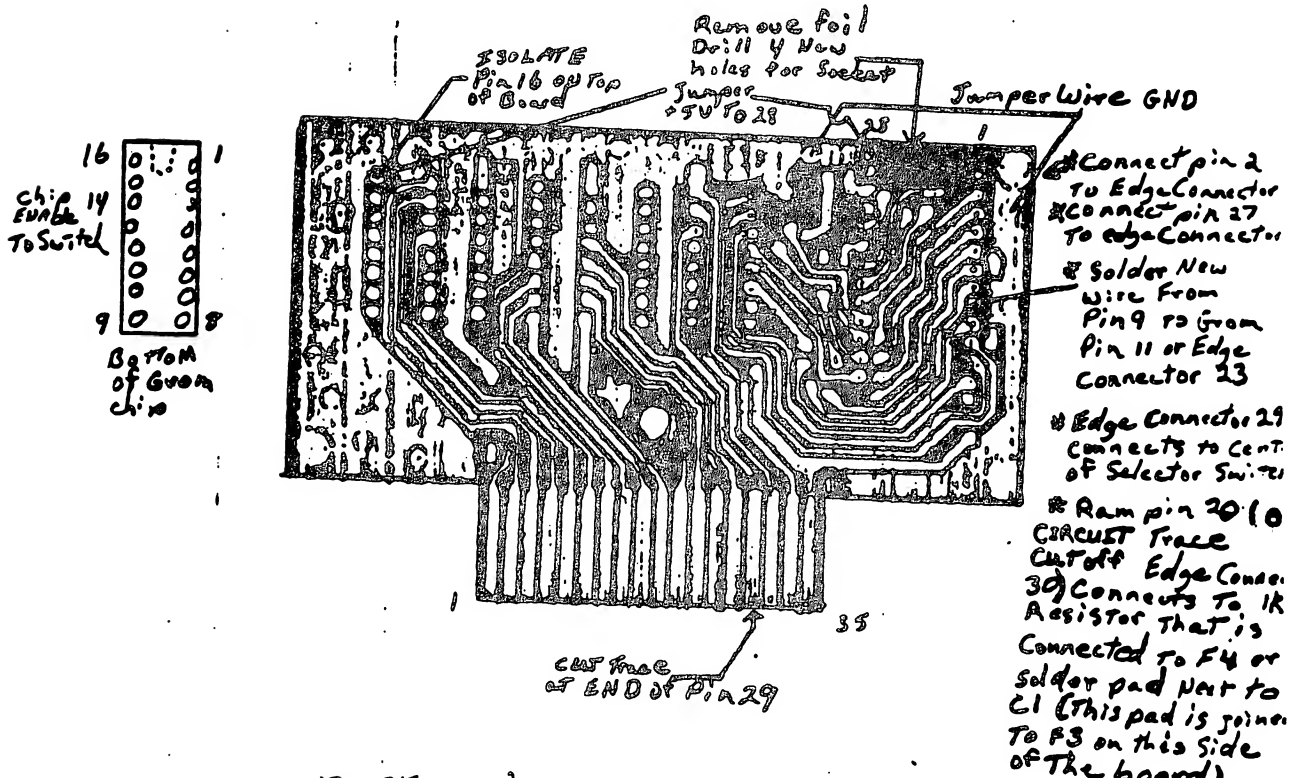

Bottom View

INSTALLING EXTENDED BASIC INSIDE YOUR CONSOLE.....

John F. Willfoath
of West Penn 99

For many of us there has been much frustration over the last several years about the "HANG-UPS" that occur to the TI-99/4A using extended basic, just as the most critical part of a program or game is reached. There are those who would lead you to believe that the power supply has been the culprit in the majority of the console locking in their club. This may have been the problem experienced in the microcosm they are in. I have experienced the problems with inconsistent and noisy D.C. voltages issued from the TI supplies also. A few months ago I ran through 5 straight VDP memory problems in a row, and could have made the statement that most if not all TI console problems will be found to have defective 4116 dynamic ram chips. This would have been absurd ! I'm making this statement only to try to reassure you that of all the possible causes for console hangs, the gram connector/cartridge connection is far and away the most common, and in particular the mating (or lack of) between the Extended Basic and Gram Connector, is the greatest culprit. The purpose of this article is to assist those of you who would like to move the Extended Basic on-board.

------ DO THE FOLLOWING AT YOUR OWN RISK !

PARTS; * 1 ' ribbon cable (36 lead) or 2 lengths of 25 lead cable
* 1 Extended Basic Cartridge (shell removed)
* 1 Double-pole, single throw slide switch (for enabling/disabling ext.-basic)
* Solder, iron, wire cutters, etc

I'm not going to get into the details for I feel if by now that you can't remove your CPU from your console, you shouldn't be attempting this. Get someone who can. Remove the Gram Connector from the unit, and attach the ribbon cable to the pins of the area of the circuit card that the Gram Connector is attached. Attach all but pins 4 and 6 to ribbon cable. 4 and 6 are unused here. Now , keeping the length of the wire to less than 8" attach the other ends of the corresponding wire to the Extended Basic card edge connector lands , remembering the relationship between the two. i.e.; pin 1 must go to pin 1, 2 to pin 2, and so on. (not 4 or 6) Before you attempt any further modification to the machine, reassemble and see if Extended Basic comes up on the menu, and still functions, SIZE, ACCEPT AT, etc. If you are still functional continue.

Remove the 100 ohm resistor indicated, and cut the two traces where shown. Now you may solder 4 equal lengths of wire to the switch (not longer than 10" in length). Attach two of the wires across the cut in the trace (x) and the other two across (y), making sure that the pairs are on the same switch pole set. Now, test the results again.

If the extended basic works when the switch is closed, and the cartridge slot will accept cartridges (meaning that a variety of GROM/ROM cartridges will function), when the switch is open, then your almost home. Mount the switch in a convenient location, and insulate the bottom of the Extended Basic Cartridge and locate on TOP RF SHIELD to left of gram conn. Reassemble. It would also be of benifit to you at this time to install a reset button across pin 6 of the CPU chip and ground. Trust me.

The reset switch will be particularly useful, that you will now not be able to reset the machine by inserting the Extended Basic cartridge. You may find that without the RESET switch, you will have to turn the console power switch off and then on to begin operation after switching from basic to xbasic or other cartridges. This is an easy option to install with a momentary contact switch across pin 6 on the CPU chip (TMS9900) and ground. Reference drawing here.

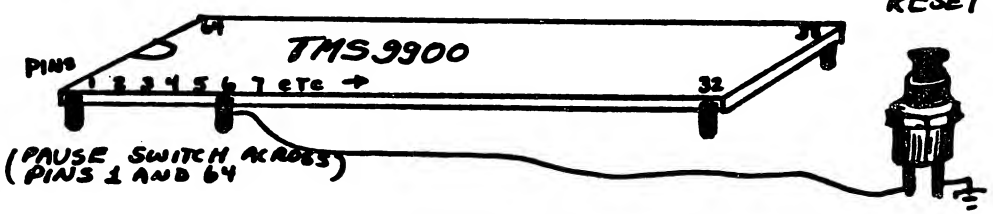

The view below is here to help you find the two traces that must be cut, and the 100 ohm resistor that must be removed.

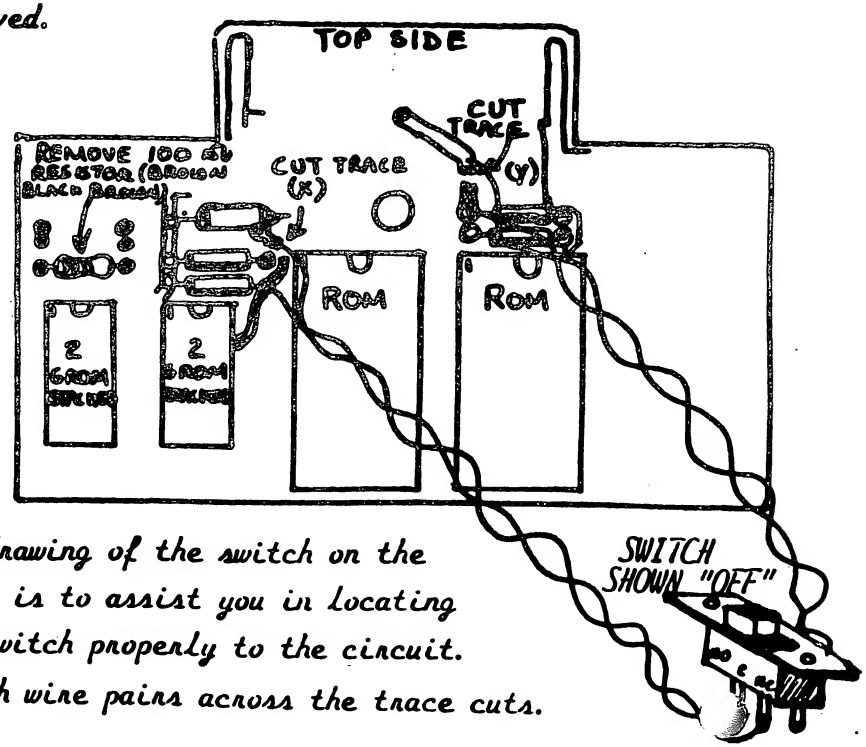

The drawing of the switch on the right is to assist you in locating the switch properly to the circuit. Attach wire pairs across the trace cuts.

INSTALLATION OF GROM CHIPS INSIDE THE TI CONSOLE

by Patrick Ugorcak
OH-MI-TI

The cartridge grom chips for most of the TI modules can be installed inside the console so that it is no longer necessary to plug the cartridges into the grom port. The programs can be selected by way of a switch attached to the grom chip. This not only saves time in not having to search for a particular cartridge but it also saves wear and tear on the grom port.

Like all articles of this type I must first warn everyone that any modification to your console will void any warranty and also the risk you take is your own. If you plan on doing this modification on your only console I strongly recommend against it. There is always a chance, although slim, that a disaster might occur.

The parts you will need for this project are:

1) Program grom chips either purchased from TI for around $4 each or taken from a cartridge.
2) Ribbon cable (6 inches long, 15 wires).
3) Thin wire to connect the switch.
4) Switch (The type of switch used depends on the application. More on this later.)
5) Low wattage solder iron (25 watt or less), solder, solder bulb to remove grom chips from module if used, etc.

This project requires the removal of the grom extender, the part the cartridges plug into, from the console and attach 16 wires to it. The other end of the 16 wires are attached to the grom chips which are being installed. A switch is attached between one of the wires so that the program can be turned on and off.

What limits the number of programs which can be installed is the type of switch that is used. I have installed two programs into a console (E/A and DMII) using a SPDT type switch and see no reason why more cannot be used. One criterion for the switch is that it must have an off position so that the program attached to the grom port can be turned off when cartridges are used (extended basic for example). If you are installing only one program then any SPST switch will work as long as it is small enough to mount in the console. If more than one program is being added then a switch with an off position is needed. I used a SPDT on-off-on type switch for my two program installation. I have seen miniature rotary switches at hos with as many as 12 positions. Imagine 11 programs available at the flick of a switch. A mini DIP switch could also be used but may not be as convenient to operate.

Procedure

Disassembling the Console

1) Remove the on/off switch piece on the black and silver consoles.
2) Remove the 7 screws from the bottom of the console.
3) Lift the bottom part of the console from the top portion.
4) Remove the 2 screws holding the power supply to the console and remove the power supply.
5) Disconnect the power cable from the power supply.
6) Remove the 3 screws holding the motherboard to the console and lift the motherboard up slightly so that the keyboard connector can be removed.
7) Disconnect the keyboard and lift the motherboard out.
8) Remove the grom extender from the motherboard.

Preparing the Grom Chips

The grom chips will be piggy-backed together to form a grom stack. Pin 14 on each program grom chip group is attached to the switch position so that the different programs can be selected. Some of the programs use as many as 5 grom chips. For example Editor/Assembler uses 1, Multiplan uses 5 and Disk Manager II uses 2. In the case where more than one chip is used, care must be taken to make sure that the chips are piggy-backed in the right order or the program will not function properly. This is not too difficult because the chips are numbered in the proper order (DMII-CD2234ML and CD2235, for example). Just make sure the chips are stacked in assending order and everything will work fine. (See figure 2 for more detail.)

To prepare the grom chips for installation do the following:

1) Carefully bend pin 14 on all the grom chips with a needlenose pliers. Refer to figure 1 for location of pin 14.
2) Piggy-back all of the chips used making sure the notches on the chips face the same direction and are arranged in the proper order as discribed above. If more than one program is being installed keep the grom chip groups together.
3) Solder all of the pins except for the pin 14's. Make sure that there are no solder bridges between the pins.
4) Solder the pin 14's for each program group together. Solder a thin, 6 inches long, to each program group at pin 14. (See figure 2 for detail.)

Installation of the Program Grom Chips

1) Separate the ribbon cable into two pieces, one with 8 wires and the other with 7 wires.
2) Attach the ribbon cable to the remaining 15 pins on the grom stack. The 8 wire piece is attached to pins 1-8 and the 7 wire piece to pins 9-13, 15 and 16.
3) The wires attached to pin 14 are then connected to the switch.
4) Attach a small piece of wire between the center of the switch and pin 29 of the grom extender. (Figure 3).
5) The wires from pins 1-13, 15 and 16 of the grom stack are attached to the grom extender positions indicated in Table A.
6) Recheck all of the connections.
7) Wrap the grom stack and wires

with electrical tape so that it will not short against the motherboard's metal shielding when installed in the console.

8) Install the switch in the console close to the grom port either on top or in the back.

Reassembling the Console

Before reassembling the console, test the programs installed. Reconnect the power supply, keyboard and monitor to the motherboard. Make sure the power supply and keyboard are on a non-conductive surface before applying any power to the console. Turn on the console and try each of the programs installed to make sure everything is working properly. Also check basic and the grom port for proper operation. It may be necessary to reset the console (fctn =) each time a different program is selected. Make sure that the grom stack switch is in the off position before inserting any cartridges into the grom port. If everything is working fine then the console can be reassembled. If a problem occurs recheck all your work.

When reassembling the console make sure that the ribbon cable is bent out of the way so that the grom port can be reinstalled into the top of the console and it does not interfere with the operation of the console. The grom stack should be placed to the left side of the console above the motherboard. Reassemble the console in the reverse order used to disassemble it.

After the console is assembled recheck it again to make sure everything is operating correctly.

If there are any questions about this project please feel free to ask. My address is: 7167 Luana, Allen Park, MI 48101.

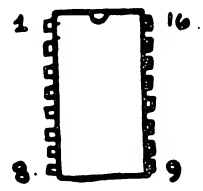

FIGURE 1
GROM CHIP PIN POSITIONS

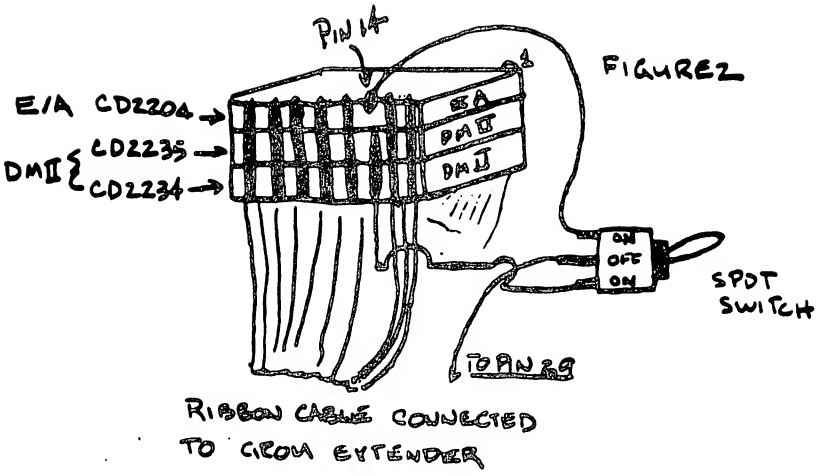

1	3	1	3	1	2	1	2	1	1	1	1	9	7	5	3
3	5	3	5	3	4	3	4	3	3	3	3	1	9	7	5

FIGURE 3
REAR VIEW OF GROM EXTENDER

Grom Extender	Grom Stack
3	1
5	2
7	3
9	4
11	5
13	6
15	7
17	8
19	9
21	10
23	11
25	12
27	13
29	14
31	15
33	16

Table A

EXPANSION BOX 32K WITH 8K MODULE RAM

EDITORS NOTE:

IN AN EFFORT TO CONTINUE PRESENTING THE READERS OF THE WEST PENN 99'ERS WITH A WIDE VARIETY OF HARDWARE ARTICLES, I'VE INCLUDED A VERY GOOD ARTICLE BY JOE SPIEGEL PAST PRESIDENT AND HARDWARE ENTHUSIAST OF THE "AIRPORT AREA COMPUTER CLUB". HE HAS TAKEN THE IDEA OF DO-IT-YOURSELF MEMORIES A STEP BEYOND ANY I'VE SHOWN HERE IN THESE PAGE, ANSWERING THE DESIRES OF SEVERAL, WHO HAVE ASKED ME IF THEY COULD BUILD THEIR OWN 32K MEMORY CARD FOR THE EXPANSION BOX.

WELL HERE YOU ARE, AND HE HAS GIVEN YOU A LOT MORE:

- 8K OF MEMORY THAT IS ACCESSABLE BY E/A USERS.(W/BATTERY SUPPORT)
- 32K OF MEMORY THAT CAN ALSO BE BATTERY SUPPORTED IF YOU FIGURE OUT HOW THIS CAN BE USED.
- AN INTERFACE BOARD FOR THE PEB THAT COULD ALSO HAVE SUCH FEATURES AS A CLOCK, A SPEECH SYNTHESIZER, ETC, ADDED IF YOU ALLOW ENOUGH ROOM WHEN YOU ASSEMBLE THIS INITIAL PROJECT.

I'M REALLY PLEASED TO HAVE ANOTHER HARDWARE HACKER SO CLOSE TO HELP TO CONTRIBUTE TO THIS AREA OF THE T.I. COMMUNITY SUPPORT.

JOHN F. WILLFORTH (412) 527-6656, WP99'ERS

I RECOMMEND HIGHLY THAT YOU REMOVE ANY "UNNEEDED BOARDS" FROM YOUR PE3, BEFORE YOU PLUG ANY OTHER BOARD OF UNKNOWN CAPABILITIES INTO AN OTHERWISE USEABLE PEB! THIS REQUEST SHOULD ALSO INCLUDE THE DISK CONT. CARD. I WOULD ALSO LIKE TO STATE FOR ALL WHO ATTEMPT THIS PROJECT, THAT YOU DO SO AT YOUR OWN RISK, NOT AND I REPEAT, "NOT" AT THE RESPONSIBILITY OF EITHER JOE, MYSELF, OR EITHER USER'S GROUP OR ANY REPRESENTATIVE THEIR-OF, AND THERE-UNDER, OR WHITHER-TO-FORE!

32K+ for the PEB: Most people with Peripheral Expansion boxes already have a 32K card. or one of the large memory cards by FOUNDATION. MYARC. or CORCOMP. For those people, like myself, that like to play with electronics and either don't have a 32K card, or want to get rid of the power hungry DRAM, here is a project for you. I got the idea for the card from an article in the R/D Computing Newsletter by Ryte Data of Canada. The project described in the newsletter was only the 8K portion of the card I built. I thought that it was a waste of a slot to only include 8K, so I added some more memory and some extra buffer chips and created the card I am describing. I would like to point out to anyone that read the Ryte Data newsletter. The 74LS368 chip is not correctly wired in their article. thus the 8K card they describe will not work properly. The curcuit diagram of my card that is included in this newsletter shows the correct wiring for that chip. I called it the 32K+ card because it not only contains 32K of Static RAM, but also has an additional 8K in the module ROM/RAM area that makes it into a "Supercart" type accessory. Thus you can have all the benifit of a Supercart without modifying your E/A module. In fact, with a CorComp controller card (or possibly the MYARC disk manager), you can load the module space without the E/A module if you have a program that can stand alone. The 8K portion is battery backed so that if you load a program like the Supercart menu that I discussed a couple of months ago, the program will remain even after the PEB is turned off. There is a switch that is wired into the card to allow the 8K to be disabled while using other modules that have ROM or RAM in them. Even with the 8K disabled, the memory is still retained. The total cost of the card is about $40.00. I realize that a used 32K card can be found for less money, but it uses DRAM which consumes much more power and does not contain the extra 8K. A version of this card could be built into the console or Speech Synthesizer for about $25.00, but there is then the disadvantage of your system not being interchangable with other peoples' systems. The internal modifications also cause problems if the console has to be repaired; you have to remove any modifications before sending it out. I can supply you sources and prices for the parts required.

Joe Spiegel

WEST PENN 99'ERS FEB. 87

EXPANSION BOX 32K WITH 8K MODULE RAM

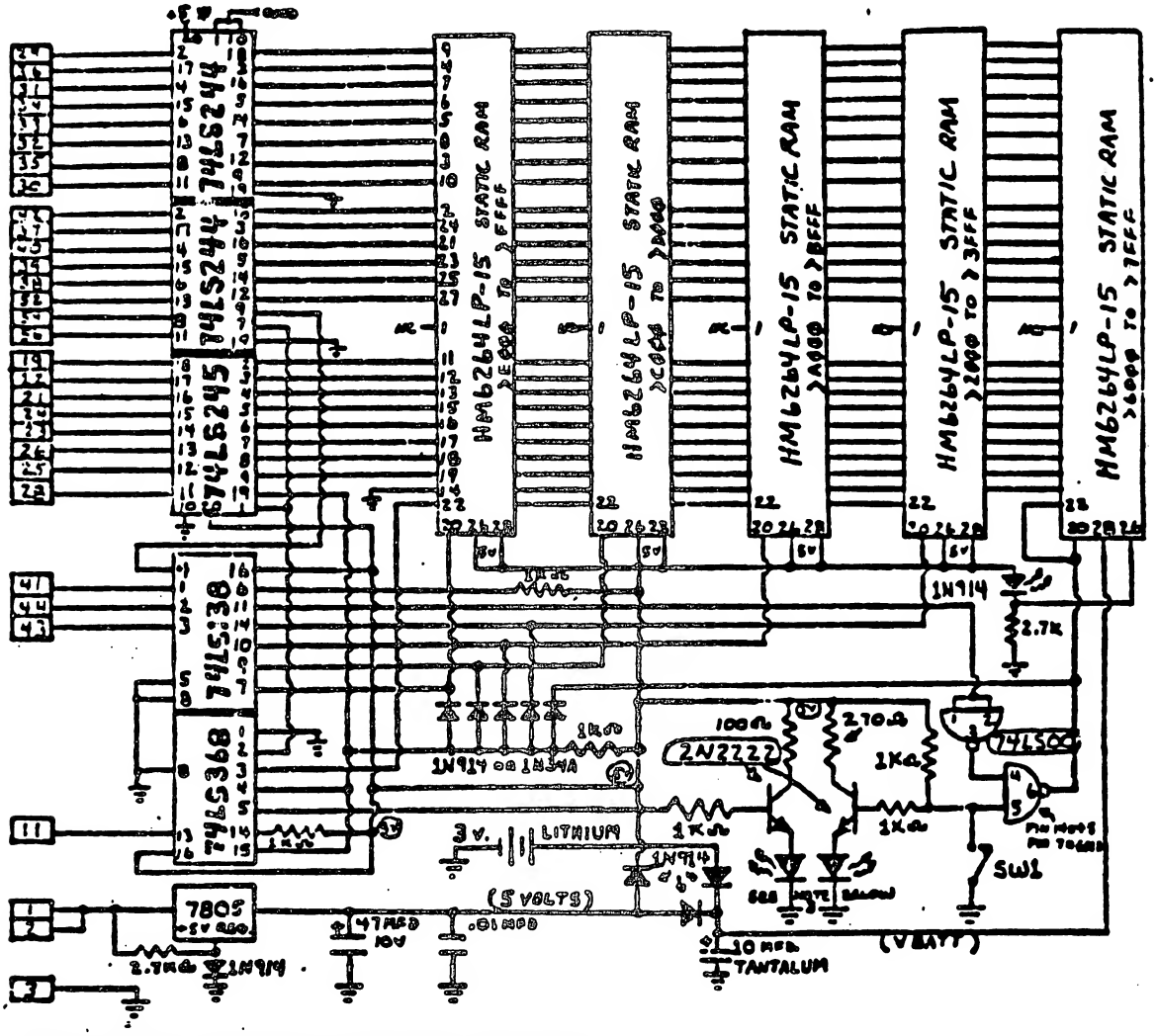

* BOTH 74LS244's MUST HAVE +5 AND GND ON THESE PINS

PARTS LIST:

BASIC 32K MEMORY CARD:

8 -	6264LP-15	STATIC RAM CHIPS
1 -	74LS138	CHIP
2 -	74LS[illegible]	CHIPS
1 -	74LS245	CHIP
1 -	74LS368	CHIP
1 -	7805	+5 V. REG.
1 -	2N2222	NPN TRANSISTOR
1 -	LED (ONLY IF NO 8K OPTION)	
8 -	1N914 OR 1N4148 DIODES (SEE NOTE 1 TO RIGHT)	
2 -	1N914	DIODES
6 -	1K 1/8 W. RESISTORS	
1 -	2.7K 1/8 W. RESISTOR	
1 -	100 OHM 1/8 W. RES.	
1 -	47 MFD. 10V. ELECT.	
1 -	.01 MFD. DISC OR MONOLITHIC	
1 -	LEAD EDGE CONNECTOR (T.I. PART# L2111121-30) 30/60 CONTACT.	
1 -	APPROPRIATE CIRCUIT CARD FOR BOARD ASSEMBLY	
1 -	MISC SOCKETS, WIRE, SOLDER EQUIP.	

8K OPTION:

1 -	6264LP-15	STATIC RAM CHIP
1 -	74LS[illegible]	CHIP
1 -	SPST TOGGLE SWITCH	
1 -	3V. LITHIUM BATTERY AND HOLDER	
1 -	LED (IF 3 LEAD 2 COLOR LED) OR	
2 -	LED'S (INSTEAD OF ITEM ABOVE)	
1 -	2N2907 PNP TRANSISTOR	
1 -	2.7K 1/8 W. RESISTOR	
1 -	1N914 OR 1N4148 DIODES (SEE NOTE 1 TO RIGHT)	
3 -	1N914 DIODES	
2 -	1K 1/8 W. RESISTORS	
1 -	270 OHM 1/8 W. RESISTOR	
1 -	10 MFD. 10V. TANTALUM CAP.	

PLEASE BE CAREFUL ASSEMBLING!

SEE TEXT ON OTHER SIDE.

EXPANSION BOX 32K WITH 8K MODULE RAM

NOTES:

1) I HAD GOOD LUCK USING 1N914 DIODES FOR THE 32K LOGIC. GERMANIUM DIODES MAY BE USED FOR MORE ASSURANCE THAT A "LOW" LEVEL CAN BE DETECTED 1N34A'S SHOULD BE USED AS THE DECODE DIODES TO PIN 20 OF THE RAM (UP TO 9 DIODES), NOT IN THE +5 V. OR VBATT CIRCUIT.

2) IT IS A GOOD IDEA TO PUT A .1 MFD BYPASS CAP. ACROSS EACH +5 V. PIN OF EACH CHIP TO GROUND. (NOT NECESSARY)

3) I USED A THREE LEAD, TWO COLOR LED INSTEAD OF TWO SEPARATE LED'S. HAVING THE RED LED'S ANODE IS CONNECTED TO THE MAIN 32K SECTION, THE FOLLOWING COLORS WILL BE SEEN IN THE PCB INDICATOR WINDOW:

RED —— 32K BEING ACCESSED
GREEN - 8K MODULE MEMORY BEING ACCESSED
AMBER - BOTH 8K MODULE MEMORY ENABLED AND 32K BEING ACCESSED

4) THE CIRCUIT SHOWS BATTERY BACKUP FOR THE 8K MODULE MEMORY "ONLY". PIN 20 OF THE BEST OF THE MEMORY CHIPS COULD BE CONNECTED TO VBATT IF YOU DESIRE, WHICH WOULD THEN SUPPORT THE 32K DURING POWER FAIL (OR TURNING OFF THE MACHINE). BUT UNLESS YOUR AN EXTRAORDINARY PROGRAMMER, YOU WILL NOT BE ABLE TO TAKE ADVANTAGE OF THIS FEATURE.

5) SWITCH SW1 DISABLES 8K, SO MODULES WITH ROM (OR MINI-MEM) WILL STILL FUNCTION.

6) LINES RUNNING STRAIGHT THROUGH THE 6264'S ARE CONNECTED TO THE SAME PINS ON ALL CHIPS. WATCH PIN 22!

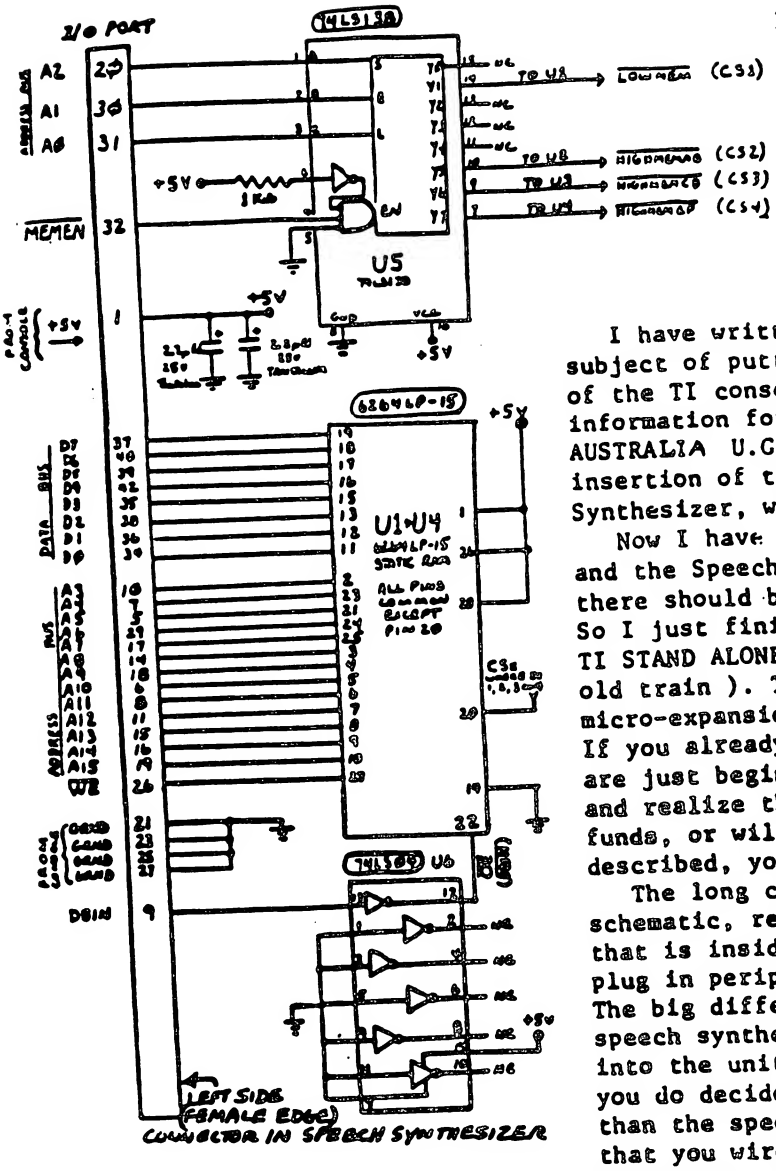

32 KiloByte MEMORY EXPANSION FOR INSIDE THE SPEECH SYNTHESIZER (OR ANY PLACE YOU WANT TO PUT IT).

by JOHN WILLFORTH
(based on ideas from the WESTRAILIA, and the CEDAR VALLEY USERS GROUPS)

I have written up several articles on the subject of putting 32K of static RAM inside of the TI console. I believe that most of the information for this came from the WESTERN AUSTRALIA U.G., and the work leading to the insertion of the same memory into the Speech Synthesizer, was done by the CEDAR VALLEY U.G.

Now I have put memory into both the console and the Speech Synthesizer. I thought that there should be no place you couldn't stick it. So I just finished putting it into the OLDE TI STAND ALONE DISK CONTROLLER (part of the old train). This made a nice quiet, sort of micro-expansion system (without RS232/PIO). If you already have a full blown system, or are just beginning to get int a disk system, and realize that you either don't have the funds, or will not need anymore than that just described, you should read on.

The long connector on the left of the schematic, represents the large 44-pin conn. that is inside the speech synth., or any other plug in peripheral ie: Stand-alone Disk Cont.. The big difference, however, is that ONLY the speech synthesizer carries pins 1,2,43, and 44 into the unit from the console. Therefore if you do decide to put memory into any other unit than the speech synthesizer, I would recommend that you wire across that unit, in other words you should run a wire from pin 1 on the console connector to pin 1 on the output end of that unit, where the 2nd unit from the console might be plugged in, and do the same for pins 2, 43, and 44. This will enable you to put the very small speech synthesizer out on the end, instead of between the 2 much larger units (console and Disk Controller). There is only one lead that is involved here that is a must, and that is the pin 1, since I have stayed with using the +5 VDC from the console, rather than tapping it from the +5 Volt source in the unit where this is installed.

If you have the documentation on the RAM chip, you may be confused by the reverse order of the address lines. DON'T WORRY, just wire the chip up as I have indicated, and if you do your part correctly, it will work. I've done nearly 20 of these installations in the console and the speech synthesizer, and in a stand alone disk controller, and as far as I know, they are all working. If you want the more simple instructions, on how to install this same memory into your console, (which is what I prefer) just contact me, by sending a stamped , self-addressed envelop, and I will send the instructions. Have fun! JOHN WILLFORTH RD#1 BOX 73A JEANNETTE, PA 15644 , or call after 9:00 PM, (412) 527-6656

32K ON THE 16 BIT BUS

By - John Clulow

Based upon ideas from Mike Ballmann

The following is a step-by-step description of how to add 64K of RAM memory on the 16 bit bus. The present modification uses only 32K. This corresponds to the memory space of the 32K Memory Expansion. The modification yields a speed increase of about 50%.

Mike Ballmann is currently working on a circuit to allow CRU decoding of the remaining 32K. This will open up a whole new area of software, including such possibilities as a real DOS which could be loaded into RAM from disk on power-up. The 32K modification described below can easily be modified for full decoding upon completion of Mike's work.

You will need two Hitachi HM62256LP-12 RAMs. One source of these is Microprocesors Unlimited. They cost around $12. You'll also need a 74LS21 and a 74LS153. These can be obtained from various electronics supply houses. All wiring should be done with wire-wrap wire. You should use a low wattage soldering pencil with a fine, pencil type tip.

The modification is done on the main board of the Black Silver console, and you'll need to refer to the Logic Board Component Location Diagram in the TI-99/4A Console Technical Data book.

1) Remove the board from the console, and identify the two ROMs. They are located between the GROM connector and the 9900 IC. One is parallel to the 9900 and the other is perpendicular to it. They are U610 and U611 on the Component Location Diagram.

2) Bend the pins on the HM62256 IC's closer so they will firmly contact the ROM pins when piggy-backed. One way of doing this is to place the RAM on it's side on a table and then move the body of the IC toward the table to bend the pins uniformly.

3) Bend out the following pins on both HM62256 RAMs: 1 2 20 22 23 26 27 28. These pins will NOT be soldered to anything on the ROMs. Holding the IC with the notch up and looking at the top, pin numbers start with pin 1 on the upper left, go down the left side, then across and up the right side. Pin 28 is opposite pin 1 on the end with the notch.

4) Place one HM62256 over the ROM that is parallel to the 9900. Make sure the notch points toward the 9900 and that the writing on the 9900 and the 62256 can be read from the same direction. Place the RAM such that pins 1 2 27 and 28 extend beyond the end of the ROM. The un-notched end of the RAM should line up with the un-notched end of the ROM. There should be a sort of "spring tension" that clamps the RAM pins onto corresponding ROM pins below it. This will help to insure good solder joints. If the RAM doesn't fit tightly, remove it and bend the pins closer.

5) Solder all RAM pins not bent out to the ROM pins below. Use a low wattage pencil with a fine, pencil type tip. Inspect each solder joint carefully in good light, under magnification.

6) Place the second 62256 on the ROM that is perpendicular to the 9900. The notch on the RAM points away from the 9900 and toward the edge of the board. As above, solder and inspect all pins that were not bent out.

7) Bend out the 74LS21 pins 1 2 4 5 6 8 10 12 14. Note that pins 1 and 14 are across from each other on this 14 pin IC.

8) The 74LS21 will be piggy-backed on the 74LS138 U504. This IC is located adjacent to the end of the board where the edge connector is. There are two 138's next to each other. U504 is the one nearest the end of the board. You will place the 74LS21 so that the UN-NOTCHED end lines up with the un-notched end of the 138 (pointing toward the cassette connector). Pins 1 and 16 of the 138 will extend beyond the notched end of the 74LS21.

9) Before positioning the 74LS21, solder 1/2" lengths of wire-wrap wire to the 138 pins 7 and 9. Then position the 74LS21 on top of the 138 and solder all pins not bent out to the 138 pins below and inspect the connections.

10) Bend out all of the 74LS153 pins EXCEPT 8 and 16.

11) Place the 153 over U613, a 74LS194. The notch will line up with the 194 notch and point toward the edge of the board away from the 9900. Solder pins 8 and 16 of the 153 to pins 8 and 16 of the 194 below.

12) At the end of the 9900 opposite to where the RAM's have been piggy-backed, you will see a line of three ICs. They are a 74LS00, 74LS32, and 74LS04. The 74LS00 is U606 and the 74LS32 is U605. Turn the board upside down so you can see the traces. Find the trace that runs from pin 11 of the 74LS00 (U606) to pin 13 of the 74LS32 (U605). Double check to make sure you're doing the pin numbering correctly. When you've found the trace, cut it with a knife so there is no continuity between the LS00 pin 11 and the LS32 pin 13.

13) Identify the piggy-backed RAM that is perpendicular to the 9900. Solder wire wrap wires connecting every bent out pin on this RAM to the corresponding bent out pin on the RAM that is parallel to the 9900. Pin 1 to pin 1, pin 2 to pin 2, etc. There will be eight wires in all to solder.

14) Solder wire-wrap wires to make the following connections on the RAM that is parallel to the 9900. Pin 1 goes to pin 24 of the 9900 (solder the wire to the 9900 pin on top of the board). Pin 2 goes to the 9900 pin 22. Pin 20 goes to two places. Connect pin 20 of the RAM to pin 22 of the RAM and also to pin 8 (bent out) of the 74LS21. There should be three wires coming off pin 20 of the RAM. Pin 23 of the RAM goes to pin 21 of the 9900. Pin 26 of the RAM goes to 23 of the 9900. Pin 27 of the RAM goes to pin 61 of the 9900 (fourth from the top on the right side). Finally, connect pin 28 of the RAM to pin 20 of the 74LS244 adjacent to the piggy-backed 74LS21.

15) Connect the following 74LS21 pins with a bare wire: 1 2 4 and 14. Connect the short wire from the 138 pin 7 to the LS21 pin 5 (bent out). Connect LS21 pin 6 to LS21 pin 12. Connect LS21 pin 8 (bent out) to the piggy-backed 153 pin 2. Connect the short wire coming from the 138 pin 9 to LS21 pin 10. Finally, connect the 74LS21 pin 14 to the 74LS244 pin 20 that you connected the RAM pin 28 to.

16) OK, we're almost done, so take a break and have a beer.

17) On the 153, connect pin 9 to pin 13 on the 74LS32 (U605). Pin 10 of the 153 goes to pin 14 of the 74LS74 next to it (U607). Also connect pin 10 of the 153 to pins 11 and 13 of the 153. Connect pin 12 of the 153 to pin 15 of the 153, and then connect pin 15 of the 153 to pin 7 of the 74LS00 U612 (next to the 74LS74). Connect pin 14 of the 153 to pin 11 of the 74LS00 U606; that's the one you cut the trace on.

18) That's it! Now have another beer before putting your computer back together. When you try it out, remember that this version isn't compatible with other 32K in the system.

If you have problems with this I can't promise I can help but feel free to give me a call or write EMAIL (419) 874-8838. Ask for John (or Hose-Head.)

* USE THIS SHEET IN ADDITION TO
· MIKE BALLMANN' INSTRUCTIONS.

AFTER YOU COMPLETED THIS PROJECT
AND YOU HAVE THE TITLE SCREEN,
INSERT EXTENDED BASIC AND TYPE
SIZE AND HIT RETURN KEY. IF
EVERTHING IS OK. YOU WILL SEE
THE ADDED RAM

11840 BYTES STACK FREE
24488 BYTES OF PROGRAM SPACE FREE

HM 6225LP-12 GOES
PIGGY BACK ON TOP OF
U610 & U611

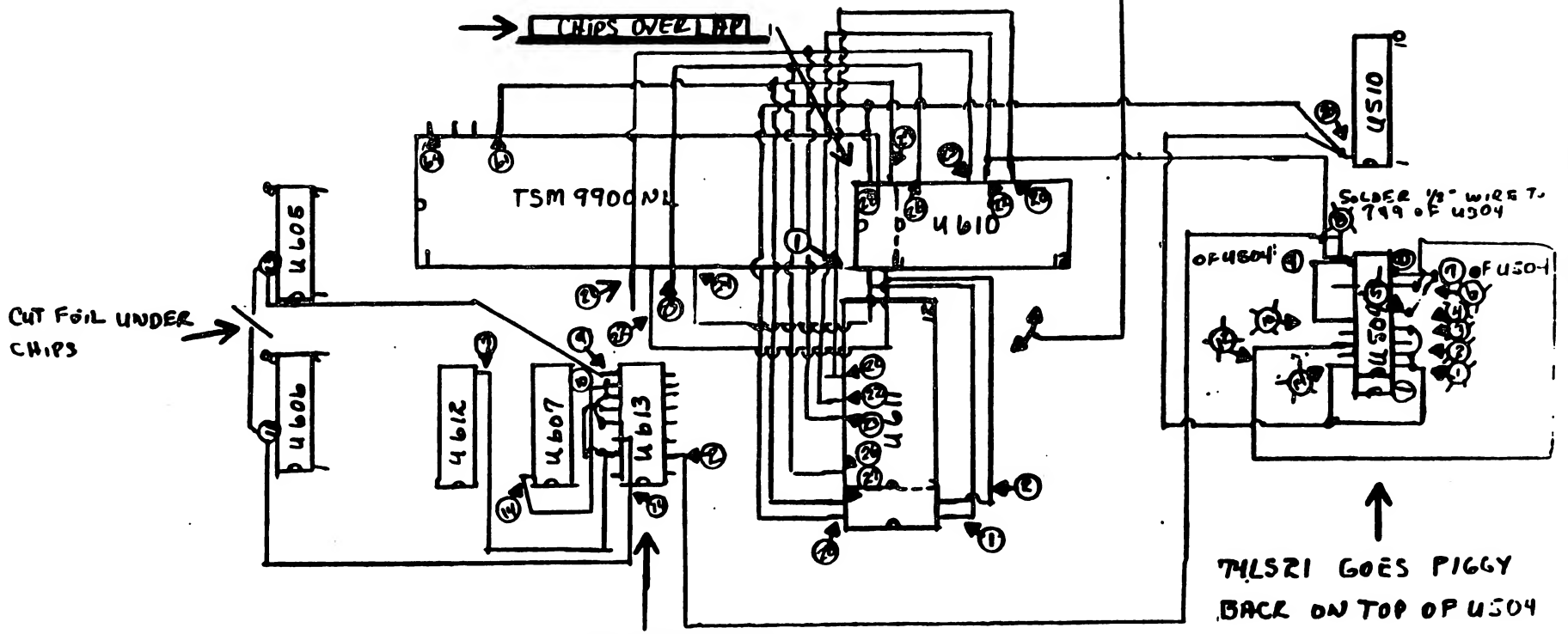

BY M.E NDMINA
WMA "BITS/BYES"

DONE

HORIZON RAMDISK 256K EXPANSION PROJECT

By Edward A. Mallett
SOUTHWEST NINETY-NINERS, October, 1986

The HORIZON RAMDISK is available in 90K SSSD (360 Sectors) and 180K DSSD (720 Sectors). This project expands the size to 256K (976 Sectors) for an increase in storage capacity of 64K (256 Sectors) or 35.5%.

This increase is accomplished by adding one 74LS154 (4 to 16 DECODER), one 74LS02 (NOR GATE), and eight 8K 6264LP-15 STATIC RAM chips, removing one 74LS138 (3 to 8 DECODER) chip, and modifying the DSR CODE to recognize the existance of the added memory. The original HORIZON RAMDISK CIRCUIT does not fully decode on of the five memory address lines from U9 limiting it to 180K. By fully decoding this line, we pick up eight more CHIP SELECT SIGNALS bringing us up to 256K (976 Sectors). This utilizes the original design to its fullest potential with only a few SIMPLE MODIFICATIONS.

The HORIZON SOURCE CODE VER_03 was used in this project, but modifications to other versions should be very similar. (Note: VER_04 arrived as this was going to press. All modifications were identical, except MEMTEST. Use the modified MEMTEST from VER_03 to check the memory added by this EXPANSION PROJECT.

::

CAUTION: THIS MODIFICATION IS UNDERTAKEN AT YOUR OWN RISK AND MAY VOID YOUR HORIZON WARRANTY.

::

CAUTION: REMOVE THE NICAD BATTERIES FROM THE RAMDISK BEFORE STARTING. USE CARE WHEN HANDLING THE RAM CHIPS TO AVOID DAMAGE FROM STATIC

::

1. Remove U1, the original 3 to 8 DECODER CHIP, from its socket and DISCARD.

2. Remove the EIGHT PIGGYBACKED PAIRS OF 8K RAM CHIPS from their sockets U3-U6 and U12-U16.

3. Remove U2, the original 4 to 16 DECODER, from its socket.

4. Remove U10, the original NOR GATE, from its socket.

5. Install a THIRD ADDITIONAL 8K RAM CHIP PIGGYBACKED on top of EACH of the removed PIGGYBACKED PAIRS OF 8K RAM CHIPS connecting EACH PIN to its CORRESPONDING PIN below with the EXCEPTION of PIN 20 (CHIP SELECT)) BEND PIN 20 outward like PIN 20 on the CHIP below it. Reinstall these EIGHT PIGGYBACKED TRIOS into their sockets (U3-U6 and U12-U13) and RECONNECT the ORIGINAL lines from PIN 20 of the CENTER CHIPS to their ORIGINAL POINTS on the EXPANSION JACK next to U3.

6. Install the ADDITIONAL 4 to 16 DECODER CHIP (74LS154) PIGGYBACKED on top of the ORIGINAL 4 to 16 DECODER CHIP, U2. Connect PIN 12 and PINS 20 THRU 24 to their corresponding PINS below. Bend PINS 1 thru 11 and PINS 13 THRU 19 OUTWARD. Reinstall the PIGGYBACKED PAIR OF 4 to 16 DECODERS in its U2 socket. Connect lines from the UPPER CHIP PINS 1 THRU 8 as follows.

PIN 1 to U1 SOCKET PIN 15.	PIN 2 TO U1 SOCKET PIN 14.
PIN 3 TO U1 SOCKET PIN 13.	PIN 4 TO U1 SOCKET PIN 12.
PIN 5 TO U1 SOCKET PIN 11.	PIN 6 TO U1 SOCKET PIN 10.
PIN 7 TO U1 SOCKET PIN 9.	PIN 8 TO U1 SOCKET PIN 7.

These provide the CHIP SELECT SIGNALS to the ORIGINAL (CENTER LAYER) of 8K RAM CHIPS.

Connect lines from the UPPER CHIP PINS 9 THRU 11 and 13 THRU 17 as follows:

PIN 9 TO PIN 20 U3 TOP 8K CHIP.
PIN 10 TO PIN 20 U4 TOP 8K CHIP.
PIN 11 TO PIN 20 U5 TOP 8K CHIP.
PIN 13 TO PIN 20 U6 TOP 8K CHIP.
PIN 14 TO PIN 20 U12 TOP 8K CHIP.
PIN 15 TO PIN 20 U13 TOP 8K CHIP.
PIN 16 TO PIN 20 U14 TOP 8K CHIP.
PIN 17 TO PIN 20 U15 TOP 8K CHIP.

These provide the CHIP SELECT SIGNALS to the ADDITIONAL EIGHT 8K RAM CHIPS (TOP LAYER)

7. Install a new NOR GATE (74LS02) PIGGYBACKED on top of the ORIGINAL NOR GATE, U10. Connect PINS 2, 7, and 14 to the CORRESPONDING PINS below. BEND PINS 1, 3 THRU 6, and 8 THRU 13 outward. Reinstall the PIGGYBACKED PAIR of NOR GATES in its U10 socket. Connect LINES from the UPPER CHIP as follows:

PIN 1 to PINS 18 and 19 U2 UPPER CHIP.
PIN 3 to U1 SOCKET PIN 6.

These provide the CHIP SELECT SIGNAL for U2 UPPER 4 to 16 DECODER CHIP thus fully decoding the available MEMORY ADDRESS LINES.

PINS 4 THRU 6 and PINS 8 THRU 13 of the UPPER NOR GATE U10 are not used and are left NOT connected. They can be used in future modifications.

This completes the HARDWARE modifications to the RAMDISK CARD. Next the DSR SOFTWARE must be modified so that this ADDITIONAL MEMORY can be accessed.

The original DSR CODE(CALL SUBPROGRAMS, ETC. are located in RACKS 90-92 at the top of the RAMDISK MEMORY MAP. The MODIFIED RAMDISK MEMORY MAP now extends to RACK 124 and the DSR must be moved to the new top, in RACKS 122-124.

NOTE: IF THE CODE IS NOT MOVED, IT WILL BE ERASED WHEN THE RAMDISK IS INITIALIZED TO MORE THAN 720 SECTORS.

The changes to the CODE consist of changing ALL REFERENCES for the 3 upper 2K blocks of memory to a NEW LOCATION, changing the LOADER PROGRAMS to LOAD the NEW CODE at the NEW LOCATION, changing the MEMTEST PROGRAM to check THIRTY-TWO 8K CHIPS, changing the RAI SECTOR CALL, and modifying the FORMAT ROUTINE of the DSR.

Luckily, this is much EASIER than it might appear since the SOURCE CODE for the HORIZON RAMDISK was provided with the KIT and is well Documented!

The following PROGRAMS will need to be modified and then REASSEMBLED with the EDITOR/ASSEMBLER. CALL/S, CHECK/S, CLEAR/S, CREATE/S, FILL/S, LOADER/S, PARTA, SVID/S, ID/S, and VERSION/S.

The BASIC program MEMTEST must also be modified. The other ORIGINAL SOURCE programs do not require modifications and are used as is.

1. MEMTEST - Delete LINES 110, 130 thru 170, 190, 200, 320 thru 340. Change LINE 180 from "LENGTH=24" TO "LENGTH=32".

2. CALL/S - Change "CI R2,1441" TO CI R2,977" AT LABEL MAIN2.

3. CHECK/S - Change "CI R2,24" TO CI R2,32" (fourth LINE after LABEL CHK1).

4. CLEAR/S - Change "LI R2,90" to "LI R2,123" (fourth LINE after LABEL LOOP1).

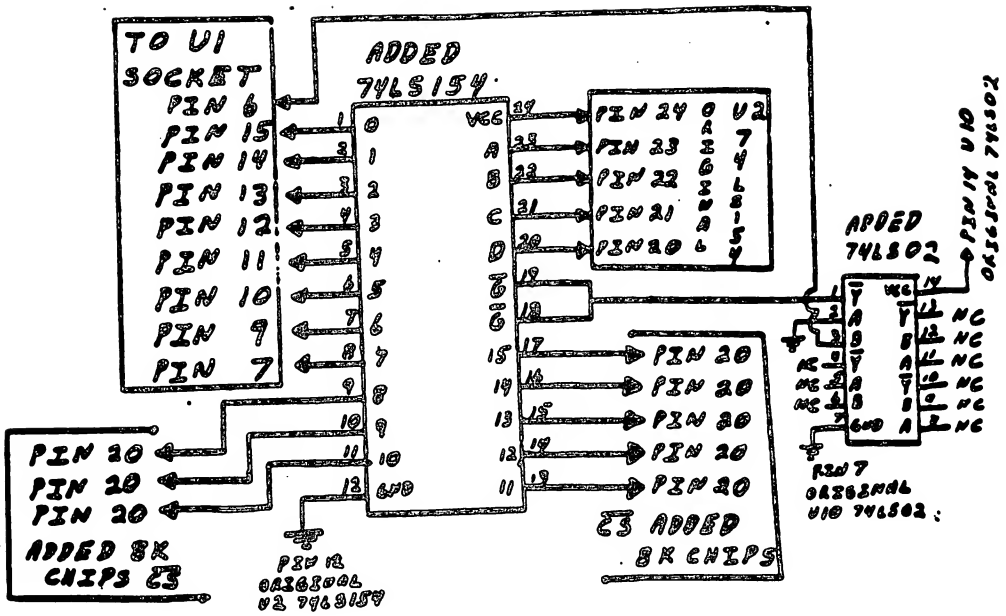
TO U1 SOCKET
PIN 6
PIN 15
PIN 14
PIN 13
PIN 12
PIN 11
PIN 10
PIN 9
PIN 7
ADDED 74LS154
VCC
GND
PIN 24
PIN 23
PIN 22
PIN 21
PIN 20
ORIGINAL U2 74LS154
PIN 20
PIN 20
PIN 20
ADDED 8K CHIPS C3
PIN 20
PIN 20
PIN 20
PIN 20
PIN 20
C3 ADDED 8K CHIPS
PIN 12 ORIGINAL U2 74S138
ADDED 74LS02
NC
PIN 7 ORIGINAL U10 74LS02
ORIGINAL 74LS02 ON U1 PIN 14

THE FOLLOWING WAS DOWNLOADED FROM DELPHI:

Foundation's Edge

- By Travis Watford

Several years ago, Foundation produced the first ram disk for the TI. When my TI memory card failed I convinced myself to shell out the bucks for their new card. Two hundred and seventy dollars bought me the Foundation 128k card with the DSR option. The ram disk had serious drawbacks; it allowed a maximum of three files and could not be accessed with any of the available disk managers. On the other hand, it was fast and it was the only ram disk available for the TI. I was satisfied; at least until other ram disks boasting greater capacity and complete floppy compatibility hit the market. As much as wanted one of the newer cards, I could not justify replacing a working, if inferior, memory card. That's how the situation remained for years. Recently, however, I started exploring the possibility of upgrading my present card and found that it could be done.

This article is the product of that work. While I can accept no responsibility for your results(let's be real, I'm just an individual), the steps outlined below have worked for me. The procedure is fairly simple and if you follow my instructions carefully, you should not have any problems. While I have painstakingly reviewed these instructions and feel certain that there are no mistakes, I won't be held liable for any misprints, be they my fault or not. Read these instructions carefully, paying particular attention to my descriptions of the card. If there are any discrepancies, DO NOT PROCEED. I assume that Foundation made no changes in the "REV 1" card, but if a trace or a chip is not where I say it is, STOP. Provided I haven't talked you out of it, $50-$60 and an evenings work from now you will have a ram disk second to none.

Even if you have no intention of altering your card, I can offer some hope. To control the added capacity of the modified card, I am developing a new eprom based ram disk emulator. If you have the original software, I don't need to dwell on its shortcomings, you know them. Even the QS-Ramdisk software addresses few of the problems. While it will allow 127 files, you must load the software each time you power-up and still can't use your ram disk with disk managers. My operating system is designed to work with all popular disk managers, and being eprom based, is always present. This operating system can be used with unmodified Foundation cards as well as those altered as per this article. The software can be purchased(when complete) directly from me for $20.

It will also be available, at no cost, in the form of a DF128 file, for those who have access to a eprom programmer. This software allows you, from console basic, to select the drive number(1-9) that the ram disk will respond to.

The upgrade is in three independent parts, which can be done in any combination depending upon the level of compatibility desired. Fully upgraded, your Foundation card, as an alternative to my software, will run the Myarc eprom used in the Myarc 512k card, giving the Foundation all of the features boasted by the Myarc card; including Myarc Extended Basic. The Myarc software can be purchased(hopefully) directly from Myarc

Before we begin, some basic orientation:
This article is written for Foundation 128k cards marked "REV 1";
The following terms will be used when describing the Foundation card:
TOP - the side of the card nearest the top when installed;
BOTTOM - the side that plugs into the box;

FRONT - the side nearest the front of the p-box when installed;
BACK - the side nearest the back of the box when installed;

The card has four rows of chips labeled "A", "B", "C", and "D", with "A" at the TOP of the board and "D" at the BOTTOM. Ignore the numbers printed on the board, we will number chips from FRONT to BACK including positions that are drilled for IC's but are vacant. Thus A-1, A-3, B-1, C-1, and D-8 are empty slots.

The sixteen memory chips are found from A-6 to A-13 and B-6 to B-13. We will be adding integrated circuits to two of the empty slots as well as utilizing unused portions of some existing chips. It is important that you always count the pins on the chips relative to the component side of the board. Pin 1 is the FRONT, TOP pin on all of the chips except C-5 and C-6. Pins are counted from pin 1 toward the BOTTOM. At the bottom of the chip, go straight across and continue counting toward the TOP. On a fourteen pin chip, pin 1 is the TOP, FRONT pin while pin 14 is the TOP, BACK pin. On chip C-6, start with pin 1 and count toward the BACK. At the bottom of the chip, move across and continue counting toward the FRONT. I don't want to bore anyone but it is imperative that EVERYONE understand.

We will be making connections to the following integrated circuits so ma
they are as follows:

A-3=74LS08	A-4=74LS40	B-2=74LS74	B-5=74LS259
C-2=74LS08	C-6=TMS4500A	D-1=74LS00	D-4=74LS244
C-5=2732			

I highly recommend using a low wattage soldering iron. For the jumpers, u
gauge wire-wrap type wire. All materials called for in this article, wi
exception of the new memory chips and the 74LS02, are available at Radio
stores. At the end of this article you will find a complete parts lis
Radio Shack parts numbers. On to the modifications:

PART#1

As you have undoubtably noticed, the led on the Foundation card is lit whe
the power is on. With very little effort, you can change this so that it i
only during ram disk accesses.

On the component side of the board, cut the trace to the TOP lead of the le
the point where it bends to go toward the BACK of the card.
Solder a 2N2222A transistor into any three holes at C-1.
Attach a jumper from the transistor's emitter to pin 14 at D-1.
Attach a jumper from the collector to the TOP pin of the led.
Attach a jumper from the base to pin 4 at B-5.

That's it. The led will only light when the ramdisk is accessed. Option
you can replace the led with a high-intensity one and replace the resistor
a 100 ohm resistor. The color code would be brown, black, brown.

PART 2

This is a more complicated than the above change, but not too bad. F
connect all of the pin 1's on the sixteen memory chips together. That's
most tedious part.
Install a 14 pin socket at A-5.
Jumper pin 14 at A-4 to pin 14 at A-5.
Jumper pin 7 at A-4 to pin 7 at A-5.
Jumper pin 7 at B-5 to pin 9 at A-3.
Jumper pin 9 at B-5 to pin 6 at A-5.
Jumper pin 3 at A-5 to pin 4 at A-5.
Jumper pin 10 at A-3 to pin 11 at A-3.
Jumper pin 2 at A-5 to pin 8 at A-3.
Jumper pin 5 at A-5 to pin 10 at A-3.
Jumper pin 6 at C-6 to pin 12 at A-3.
Jumper pin 7 at C-6 to pin 13 at A-3.
Jumper pin 1 at A-6 to pin 1 at A-5.
Jumper pin 27 at C-5 to pin 28 at C-5.
Plug an integrated circuit, 74LS02, into the empty socket.

That's it for the memory expansion folks. At this point, the board sho
operate exactly like it did before. Remove the memory chips and replace t
with sixteen new chips. They can be ordered from:

MICROPROCESSORS UNLIMITED, INC.
24,000 S. Peoria Ave.
Beggs, OkAmO~421
(918)267-4961

The parts number is 41256(150ns). These parts can be ordered elsewhere bu
have found this distributer to be extremely reliable. Extreme care should
used whenever handling 256k memory chips. Don't handle the chips until
install them. Place a sheet of tin foil on a table. Lay the board, compon
side up, on the foil and gently put the chips on the foil. Keep one hand on t
foil and with the other, plug each chip carefully into the board. This simp
precaution can prevent premature failure of the chips.

Once you have replaced the memory chips you will have a half megabyte of r
disk space. To use it you will need my software. The Foundation card is mapp
to CRU address >1E00 instead of the Myarc's >1000. This prevents the card fr
working with the Myarc controller and makes the ram disk unavailable if it
given the same number as an active floppy disk. The Myarc ram disk will "mas
a floppy with the same number. That is, if the ram disk is set up as drive on
extended basic will pull the load file from the ram disk instead of the flopp
Multi-Plan, TI Writer, the Editor/Assembler and much other software will do ti
same. The system starts looking for disk drives at CRU address >1000. Sinc
the floppies are at >1100 and your Foundation card is at >1E00, the system won
find the ram disk if it is set to the same number as an active floppy. Th
answer to this problem is to change the ram disk base address. The idea
location is >1000, like the Myarc card, so....

PART 3

Install a 14 pin socket at B-1.
Jumper pin 14 at B-1 to pin 14 at B-2.
Jumper pin 7 at B-1 to pin 7 at B-2.
Jumper pin 8 at B-1 to pin 13 at C-2.
Jumper pin 9 at B-1 to pin 5 at D-4.
Jumper pin 10 at B-1 to pin 12 at A-4.
Jumper pin 11 at B-1 to pin 9 at D-4.
Jumper pin 12 at B-1 to pin 4 at A-3.
Jumper pin 13 at B-1 to pin 7 at D-4.
Cut the trace to pin 4 at A-3. This trace can be cut between A-3 and A-4 on the component side of the board. There should be four thin traces there, cut the third from the TOP.
Cut the trace to pin 13 at C-2 on the component side of the board. The lead can be seen coming directly off the thirteenth pin.
Cut the trace to pin 12 at A-4 on the solder side of the board. The trace can be seen coming directly off the twelth pin.
Install a 74LS04 in the empty socket at B-1.

That's all folks. You now own a half meg ram card ready to run my controller sprom or Myarc's. Enjoy!

Low wattage needle-point soldering iron	- 64-2051	$5.95
30 gauge wire-wrap wire	- 278-502	2.39
74LS04	- 276-1802	.99
1/4 watt 100 ohm resistor(optional)	- 271-1311	.39
14 pin DIP sockets(2-pack)	- 276-1999	.89
High brightness led(optional)	- 276-066A	1.19
2N2222A transistor	- 276-2009	.79

The above was published in the August 1987 newsletter of the Midlands 99'ers. Travis Watford can be reached via the Club's BBS at 803-754-4996 at 300/1200 baud, or care of the club at:

Midlands 99'ers
P.O. Box 7586
Columbia, S.C. 29202

Any users of Omega can also get the latest bug report on Omega at the above BBS or you can leave reports of bugs.

Barry Harpring
Midland 99'ers
GEnie (L.HARPRING)
DELPHI (LJHARPRING)

FOR MORE INFO:
CONTACT: R. FLEETWOOD
PO BOX 181662
DALLAS, TX 75218

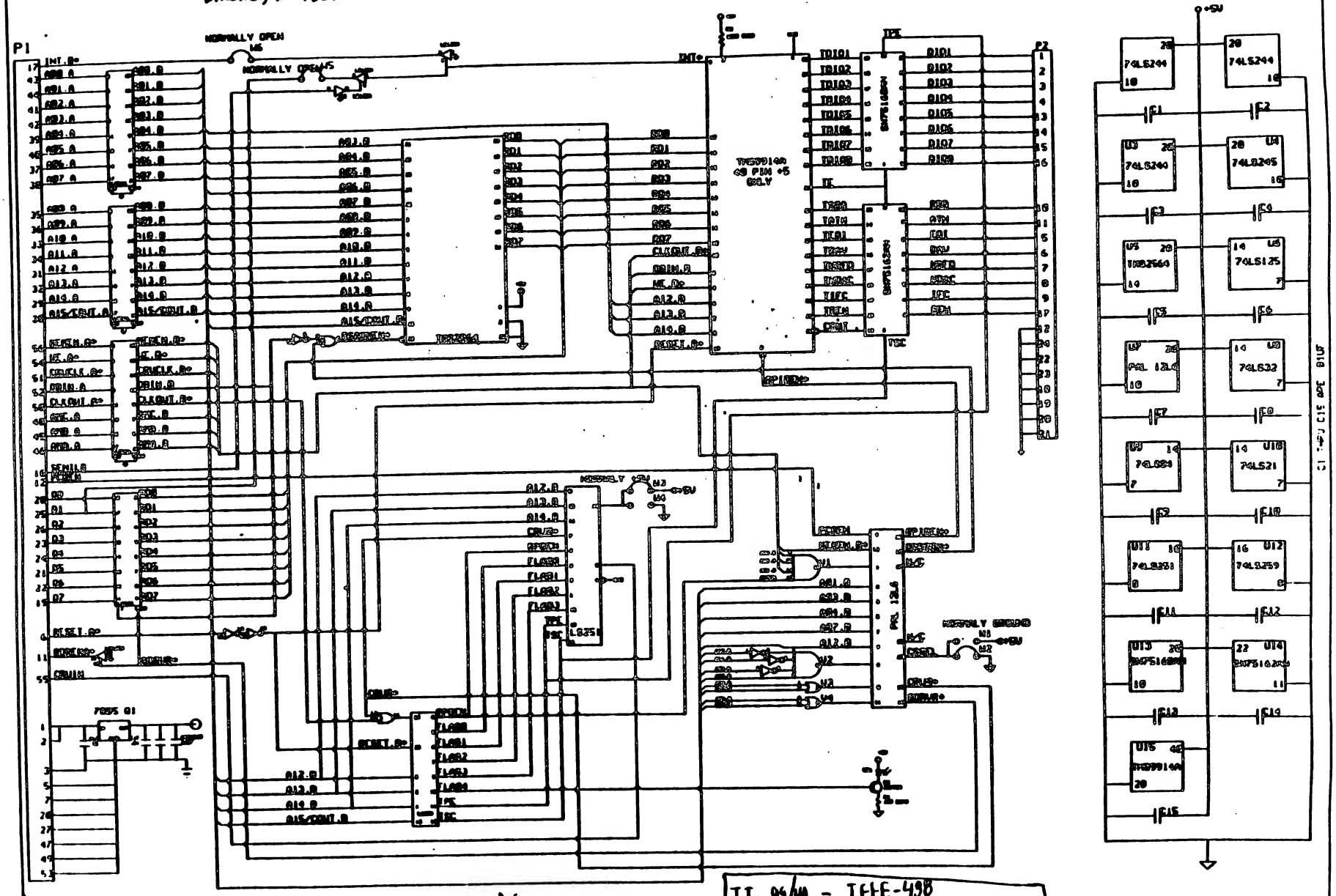

NOTE: NO SOURCE HAS BEEN FOUND YET (EVEN [illegible] I.I.) for THE TMS 4914 chip. This is the heart of this interface. The search will continue.

I.I. 94/4A - IEEE-498
INTERFACE
CARD SCHEMATIC

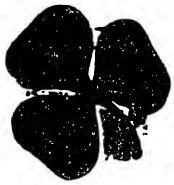

ELECTRONIC ADVENTURES

by Pat Saturn

This column will deal with building and understanding electronic gizmos that you can build for your computer with simple tools and available parts. Our first project will deal with sound. One of the ports on the back of your TI is the output for video and sound, located in the left rear of your computer.

The plug is a male five pin din with a locator notch. This plug has an arrangement of five wires which if you are using a TV set are connected to a video modulator, (the ugly box at the other end). You may have already done something about the so-so picture that this arrangement produces by buying a moniton, if so then please goto the next article because this one will more than likely bore you.

Now for those of you who are still reading...

About those five wires, First there is a small thin wire covered with an opaque white plastic insulator, wrapped with a braided wire shield, again covered with an opaque white insulator, (usually nylon). This is the wire that carries the video, modulated VHF signals and the ground. The yellow wire is direct audio, the black is ground and, the red wire is B+. You need not concern yourself with the last wire for it will serve no useful purpose in our adventure.

Now you may not be aware of a 12 inch green screen monitor available from Zettlers for $99.99, But...it has no sound. Not to worry, this adventure is going to deal with just that... Let's assume you have a monitor with no sound, or you just want sound in your console like the other computers...

The circuit shown below will do just that. It is a 7 watt amplifier made with radio shack parts for less than $25.00 (my kind of price). The amp uses a single IC to produce up to 7 watts of output with less than 250mv of input. The unit is designed to run on 11 to 14 VDC. The supply should a relatively well filtered source of DC capable of one amp of current. (Next months article).

Some tips before you begin....when you mount the caps and resistors place them against the PC board. Do not leave them hanging in the air. It is recommended that you use a small soldering iron, (25 watts or less). Keep the tip clean by wiping the tip on a damp sponge or cloth. Use small diameter solder (.035 or smaller). Use a good grade of solder (Kester 60/40). READ EACH STEP COMPLETELY THROUGH BEFORE DOING IT !!! The electrolytic caps are marked with a polarity either with a plus or minus sign. Install them so that the polarity is correct as shown in the parts overlay. (fig #1) ALL COMPONENTS ARE INSTALLED ON THE TOP (NON-FOIL) SIDE OF THE PC BOARD. The overlay below is looking down on top of the board with an x-ray view of the bottom, (foil side).

ASSEMBLY INSTRUCTIONS

1. Locate the TA7205 Audio IC. Note the location of pin 1 as illustrated in the drawing. Install the IC in the PC board up to where the pins get wider. Make sure the pins are located in the correct holes per fig 2. Pin #1 is marked with a small dot on the chip. Carefully solder pins #1 & #2, then solder the remaining pins. Your solder joints should go completely around the pins to form a small cone, and should be shiney, (not grey or blob like). Bad solder joints will cause problems later. 2. Install the five disc capacitors being careful to put the proper value in each location, (see fig #2). Keep in mind that often the parts themselves are labeled differently than the package, so save the package until you are finished. Solder each cap as it is installed and clip the excess leads. 3. The electrolytic capacitors should now be installed, (see fig 2.) , making sure the polarities are correct. Electrolytic capacitors are tubular in shape and have either a plus or a minus sign on them to show polarity. The working voltage on electrolytics is simply a DO NOT EXCEED rating and has nothing to do with operating characteristics, thus a cap will work as long as the microfarad value is correct and the voltage rating exceeds the maximum circuit voltage. Solder each cap as it is installed and clip the excess leads. 4. Insert the vertical mount potentiometer in the triangle hole pattern and push it so the pins stick completely through the board. Solder, DO NOT CLIP. 5. Insert the resister in the location shown. Solder and clip. 6. Strip about 1/8" from a piece of red #22 or #24 stranded wire. Do the same with a piece of black, make both pieces approximately 8" long. Solder these two wires to the POS & NEG positions on the PC board. Strip a 6" piece of shielded cable on both ends and solder them to the two speaker pads & the other ends to a speaker. Remember to observe polarity, (the center wire to POS and the shield to ground). 7. before applying power, check the PC board for bad solder joints or solder shorts. make sure all components are in their proper location and the polarities on the electrolytic capacitors are correct. 8. Connect a 4 OHM speaker or two 8 OHM speakers in parallel, (4 OHMS TOTAL). A 4 OHM speaker puts out more power than an 8 OHM unit. 9. The IC has a heat tab, however if the unit is used at maximum ratings for extended periods of time the IC will get too hot. Cut a 1" x 2" piece of .032 to .060 aluminium or copper and mount it to the existing tab on the IC to provide additional heatsinking.

CONTINUED

fig #1 OVERLAY PARTS LOCATION W/X-RAY VIEW OF CIRCUIT ON BOTTOM

fig #2 PARTS LOCATION ON -PC BOARD SHOWING POLARITY OF COMPONENTS

fig #3. SCHEMATIC OF AUDIO AMPLIFIER CIRCUIT

fig #4. SUGGESTED POWER SUPPLY EXAMPLE SCHEMATIC
(WE WILL BUILD THIS ONE NEXT MONTH)

PARTS LIST

PART	QUAN	VALUE/DESC.	RADIO SHACK PART NO.
C 1	1	1000 MFD@35V ELEC	272-1037 / $1.59
C 2	1	470 MFD@35V ELEC	272-1030 / $ .99
C 3	1	220 MFD@16V ELEC	272-1029 / $ .79
C4&8	3	47 PF@50WV DISC	272-121 / $ .39
C5&11	2	.05 MFD@50V DISC	272-134 / $ .49
C6	1	47 PF@50V DISC	272-121 / $ .39
C 10	2	47 MFD@35V ELEC	272-1027 / $ .69
C 7	1	4.7 MFD@35V ELEC	272-1024 / $ .49
R 1	1	82 OHMS 1/4W	271-011 / $ .19
R 2	1	25K OHM POT 1/8W	271-336 / $ .49

WARNING

1. BEWARE: The author suggests that you do not attempt this project yourself if you are not familiar with electronic circuit boards. You will be working with high voltage which may be dangerous. Get someone familiar with this if you wish to make it!

2. Please understand that neither the author nor the editor can be held responsible for mishaps, damages, or injuries incurred while attempting this project.

3. The drawings are not to scale but will be correct if shot to 93% on a copier.

4. If you want the actual size circuit print free, contact Pat, and he will get it for you.

5. You may buy this P.C. board from Pat. There must, however, be a minimum order of 10. The exact cost is not known, but they will be under $10.00 each. To order, write Pat at: 1456 Granview Ave., Columbus, Ohio 43212.

TI EQUIPMENT

Need TI equipment? Pat Saturn sells almost anything you need. Contact him at Zettler Hardware, at the meetings, or at 1456 Granview Ave., Columbus, Ohio 43212.

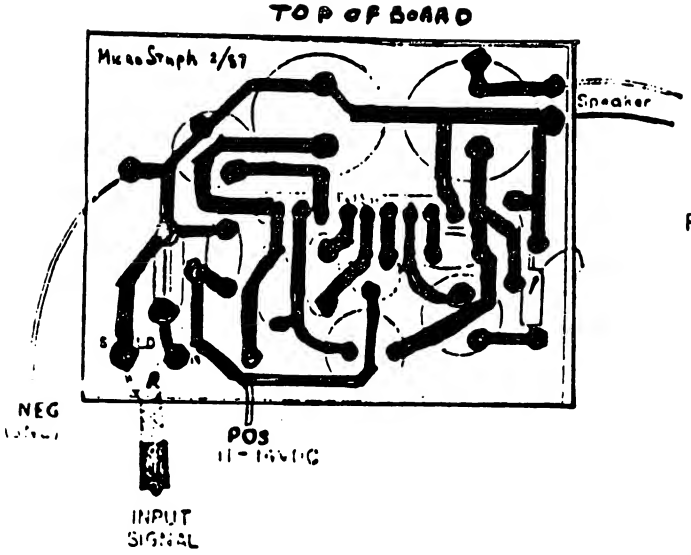

Fig.#1

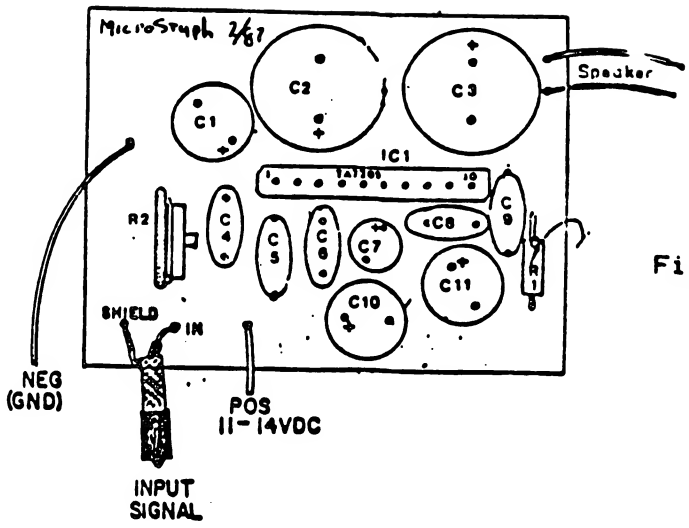

Fig.#2

Fig.#3

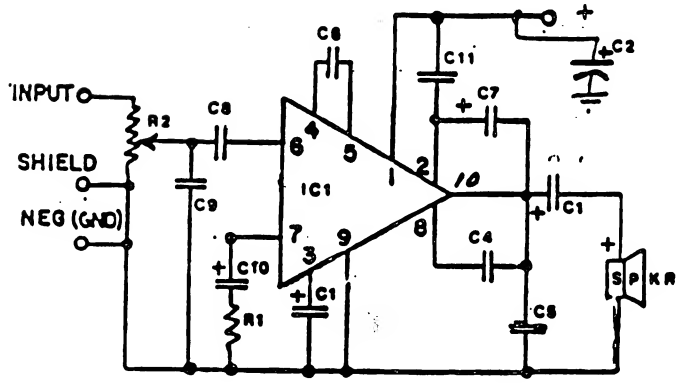

Micrograph 2/87

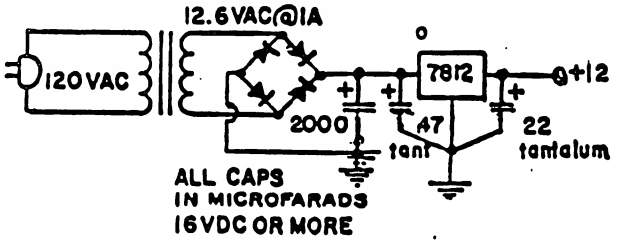

Fig.#4

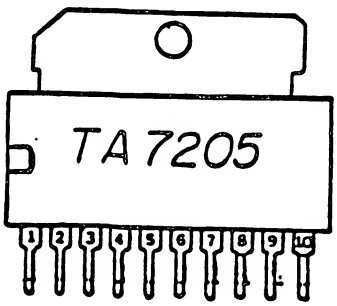

ENHANCED COMPUTER AUDIO

COPYRIGHT DALLAS PHILLIPS 1986
BLUEGRASS 99 COMPUTER SOCIETY, INC.

A couple of months ago, when . demonstrated several music programs for the TI computer, I ran the computer sound through a high-fidelity, stereo amplifier and speaker system. Many people were astounded by the quality of the sound that the TI-99/4A is capable of producing. Since then, several people have asked how they can take audio from the computer and reproduce it through other sources. This article will answer that question and a few other questions that have not yet been asked.

First, let me do some advertising for a brand new device for the TI-99/4A.

```
**************************************************
*                                                *
* This device provides the means for:            *
*                                                *
* OPERATING UP TO TWO COLOR MONITORS, WITH       *
* SOUND, AND STILL USING THE MODULATOR TO PRO-   *
* VIDE THE SIGNAL FOR TELEVISION OUTPUT.         *
*                                                *
* OPERATING A MONITOR AND/OR A TV SET WHILE      *
* RECORDING THE SOUND OUTPUT.                    *
*                                                *
* OPERATING A MONITOR AND/OR A TV SET WHILE      *
* REPRODUCING THE SOUND THROUGH A HIGH-FIDELITY  *
* SOURCE.  (The sound output is really mono-     *
* phonic but can be reproduced through a stereo  *
* system or through a device that produces sim-  *
* ulated stereo.)                                *
*                                                *
* OUTPUTTING YOUR COMPUTER TO A VCR.             *
*                                                *
* PRODUCING COMPLEX ENTERTAINMENT, EDUCATIONAL   *
* OR SALES PROGRAMS BY EASILY COMBINING THE      *
* COMPUTER'S CAPABILITIES IN VARIOUS LANGUAGES.  *
*                                                *
* MIXING HUMAN VOICE COMMENTARY OR SINGING WITH  *
* THE AUDIO OR VIDEO OUTPUTS FROM THE COMPUTER.  *
*                                                *
* Our price NOW - ONLY $___.__                   *
*                                                *
**************************************************
```

Wow! Sounds like we had better order ours right now! Well, you don't have to. You can build it yourself, or if you just happen to have two left hands, with five thumbs on each hand, you can have someone assemble it for you. It is an easy, one evening project. If someone is interested in producing it, commercially, we'll talk partnership.

You know, by now, that you will need a bunch of exotic parts that can only be obtained by ordering them from forty-seven different companies, in Timbuctoo and other unheard of locations. WRONG! Every part can be obtained down the street at the nearest Radio Shack store. Now, as to the outrageous cost. If you already have a 1/4" I.D. grommet, the total cost can be as low as $5.55 plus tax. If you have to buy the grommet it will cost you an additional 99 cents but you will have 30 grommets left over for the next job. You may wish to give the project a really professional look. If you do, a package of rub-on lettering will cost $2.69. Of course, you will have enough of these left over to last for a few more years too.

The complete parts list is taken from Radio Shack 1987 Catalog, No. 406. I find that having this list will save a lot of time when you go to the store for the parts.

ESSENTIAL PARTS:

Chassis Box; 2-3/4 x 2-1/8 x 1-5/8",	Cat. 270-235, Page 120	$1.69
Plug; 5 pin DIN,	Cat. 274-003, Page 121	1.49
Chassis Jack; DIN,	Cat. 274-005, Page 121	.59
Phono Jack; RCA type, chassis mount, Pack of 4,	Cat. 274-346, Page 121	1.79
TOTAL		$5.56

ADDITIONAL PARTS:

Grommet; Vinyl, 1/4" I.D., Pack of 31 pcs., assorted,	Cat. 64-3025, Page 134	.99
Dry Label Transfers;	Cat. 270-201, Page 120	2.69

NOTE: The aluminum box is used because it provides good shielding. Do not substitute a plastic box.
Some of these boxes are very poorly formed. If you can't find a good one in one store try another store or a source other than Radio Shack.

CONSTRUCTION:

Start by making a layout. My favorite method is to do it on paper, attach the paper to the actual work with rubber library cement, drill and cut directly through the paper, then peel the paper off and finally, roll the rubber cement off with a fingertip. This leaves a clean, unmarred sur-

...AUDIO

face but this job is simple enough that layout can be done directly on the work surface, if you prefer.

All holes are in the "top" portion of the box so you can start by laying the bottom aside. (See illustrations.)

Lay a straight edge across the ends, from corner to corner, and mark across the center, to produce an "X". (See figure 1A.)

On the top, measure in 1/2" from all sides and make four marks, from edge to edge, 1/2" in from each edge. (See figure 1B.) This will produce 4 "Xs", one near each corner.

Draw a horizontal line across one end of the box. This line must intersect with the "X" that you have alredy drawn. (See figure 1C.)

Now, measure 7/16" outward from the center line, along the line you just drew, and make a mark across the line. Do this again, on the other side of center. These marks must be 7/8" apart. (Check figure 1C.)

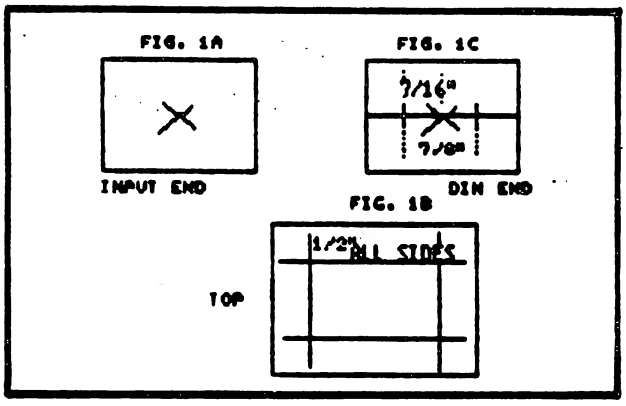

Layout is now complete.

Re-assemble the box, for strength. If the box will snap together well, no screws are necessary.

Center punch all "Xs" lightly, then drill ALL "Xs" with a 1/8" bit.

Next, drill all holes, EXCEPT the two that are 7/8" APART, with a 1/4" bit.

Finally, drill ONLY the center holes in each end with a 3/8" bit.

Ream, drill or use a hole punch to cut the center hole between the two 1/8" holes that are 7/8" apart, to 5/8" diameter. It will almost cut into the small holes.

Deburr all holes.

Drilling is now complete.

If you will be using lettering to label your outlets, do it now. Look at the box, with the grommet toward you. The two RCA jacks on the left side of the box are AUDIO. The two on the right side are VIDEO.

When you have completed your lettering, insert the grommet in the 3/8" hole.

Mount the DIN chassis jack in the 5/8" hole, using the bolts that are packed with it.

Mount the four phono jacks in the top, being certain to place the ground lugs so it is easy to run a bare wire through them and to turn the jacks so it is easy to wire the "hot" lugs.

Mounting is now complete.

Cut your RF modulator cable about 8" from the end of the plug. (A piece of the original modulator cable is used because it is very difficult to buy cable with the right number of conductors, having two separate shielded conductors.) Only video and audio travel through this cable so you don't have to worry about causing standing waves.

(NOTICE: If you are not able to produce good solder joints, in delicate work, now is the time to ask for help.)

Push the cut off pigtail, with the DIN plug attached, through the grommet and remove enough of the jacket to allow you to route wires to the DIN jack.

Wrap three turns of solid, insulated wire around the jacket of the cable, at the point that will be just inside the grommet, and twist it tightly. This is done to prevent the cable from being pulled from the box.

Using the back side of the tip of a knife, unravel the two shields, then twist the resulting wires, from each shield, to form two cables that can easily be soldered.

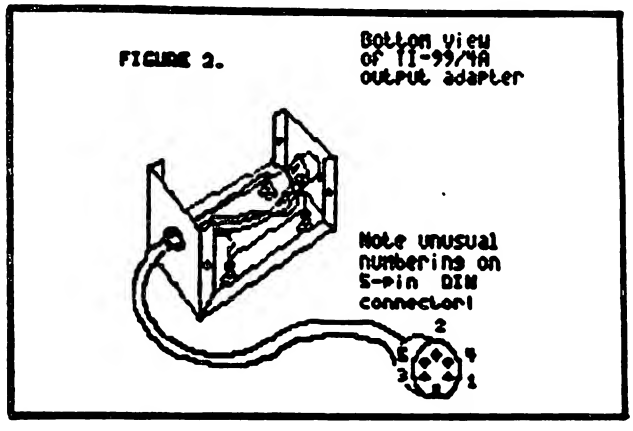

NOTE THE UNUSUAL NUMBERING SYSTEM!

Wire colors are not used in this article because all TI RF modulators do not use the same colors.

Connect the two shields to all four of the phono

...AUDIO
jack ground lugs, to pins 2 and 5 of the DIN jack and to each other.
Connect the wire from the plug's #1 to the jack's #1.
Connect the wire from the plug's #3 to the two hot lugs of the RCA jacks on the left side of the box and to the DIN jack's #3.
Connect the wire from the plug's #4 to the two hot lugs of the RCA jacks on the right side of the box and to the DIN jack's #4.

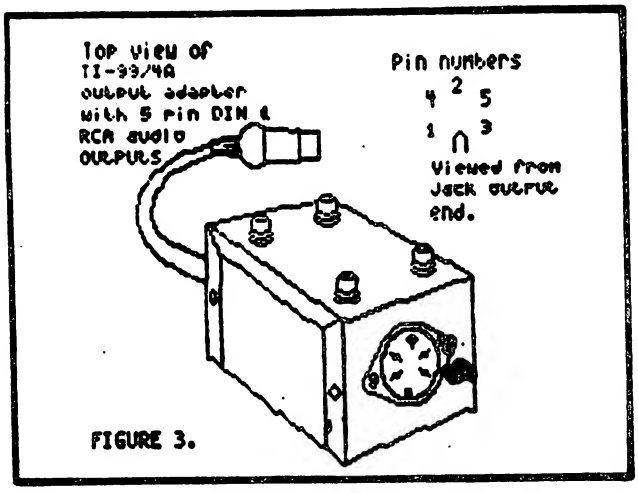

FIGURE 3.

Wiring is now complete.

Make a note of which colors connect to which pins in the DIN plug.
Connect the new DIN plug to the end of the modulator cable.
Snap the bottom of the box in place. If it fits well no screws are necessary. If screws are used take care that the screw points do not cause short circuits. (If all solder connections are properly done there is little possibility of the adapter ever needing repair and I find that alum- inium pop rivets are much neater than the screws, if you have the tool to insert them.)

If you wish to spray the adapter with a clear protective coat, mask all of the jacks and spray very light, misting coats, rather than wetting the surface. A wet coat will lift your lettering.

Now that you have constructed the UNIVERSAL OUTPUT DEVICE we will see how to put it to use.

The first claim was that it would provide operation of two sound monitors and the TV modulator simultaneously. That one is easy:

1. Plug the Universal Output Device into the console.
2. Plug the TV modulator into the DIN out jack.
3. Using audio connector cords, connect the input of #1 monitor into one audio out and one video out. If you wish to extend an output into another room, make the cords from low impedance microphone cable.

Next, to operate a monitor and/or a TV set while recording the sound output:

1. Same as 1, above.
2. If using a TV, same as 2, above.
3. If using a monitor, use audio connectors, as described above. You may use either pair of RCA jacks.
4. Connect the recorder auxilary input to one of the RCA audio out jacks, by using a standard audio cable. See 3, above if you wish to run to a recorder in another room. If you intend to record both tracks of a stereo tape, use a "Y" adapter cord at the recorder end.

To operate a monitor and/or a TV while reproducing the sound through a high-fi amp: (All steps are as directly above except that the inputs are to an amplifier instead of recorder.)

To output your computer to a VCR:

1. Same.
2. Most VCRs have audio and video input and output jacks. If yours has, simply use the audio cords to run from one audio out and one video out to the respective audio and video inputs. If your VCR doesn't have these jacks, use the RF modulator the same as to a TV set.

Producing complex programs by combining the computer's abilities in different languages:

1. Run your audio programs (music, sound effects or speech) and record them. Produce all that will be needed and record them in whatever order you wish to use them.
2. Time all programs and write the times down.
3. Decide what video graphic programs you want to use.
4. Time the graphics programs and write the times down.
5. Adjust either the video or audio programs so the times approximately correspond.
6. Connect the recorder output to the video input of the VCR and experiment to determine the desired volume setting. When this is determined rewind both the audio tape and the VCR.
7. Run the graphics programs, recording them with the VCR video input and, at the same time run the tape to the audio input. Note: It is virtually impossible to produce lip sync in this

...AUDIO

manner but illustrations for songs or background music for commercial "slides" works well.

Mixing real voices with the computer images or sounds:

(If mixing "live" voices with graphics this is done the same as the above instructions except that the audio recorder can be set to the "monitor" position and the monitor output fed to the VCR, along with the video.) Lip sync works well, using a real voice, this way.

(If mixing human singers with computer music simply run the computer out to one stereo input and the microphone, or the premixed output from another tape into the other stereo input.)

That about covers it and, be the Good Lord Willin' an' the roads ain't slick I'll attempt to demonstrate some of these techniques, with a program of Christmas music, at our December meeting.

GIVING YOUR AVATEX 1200 SOME SOUND

If you or someone you know is into electronics this project is for you. Of course you have to own an Avatex 1200! First thing, PUNN will assume no responsibility for any damage done to you or your modem. This project is done AT YOUR OWN RISK!

Now, to get down to business. First, remove the three Phillips screws from the back and pop open the cover. There are four pressure clips holding on the cover. If pressure is not applied just right they will break (I ought to know, I broke one!).

All components can be mounted on a small breadboard and wires run from the various points on the pc board.

Set the modem so the LED's and buttons are facing you. Look to the left of the three control buttons; there will be 5 resistors side by side. The leftmost one is labeled 'R21'. This is the series resistor for the MC light. It will be used to switch the sound device. On the far end (rear) of R21 is an area of metallization (trace) which connects both R21 and its neighbor.
This, if measured with a voltmeter to ground is +5 volts.

From the front of R21 (opposite of just mentioned) run a wire to a 3.3K resistor. This resistor connects to the base of a PNP transistor such as a 2N2907 or 2N3906. We will call this Q1. The emitter of Q1 will be connected to +5 volts from the back of R21 or from any +5v line from the regulators. (They are on heatsinks near the back on the right side.)

Time to test. If you have gotten this far without any trouble you can now test the hookup. Turn on your modem and measure the voltage between the collector and ground (heatsink of regulator). You should get around +5 volts. If not, turn off everything and check your wiring. If all goes OK, call a computer. When you get the connect signal the voltage on the collector should drop to zero.

Great! Now to build the amplifier. If you are mounting everything on the breadboard it will make a neater package and give you less trouble. The amplifier consists of an LM386, 10k trimmer pot, 100k resistor, 220uf electrolytic cap, voltage above 10v, a .1uf cap, and a small 8 ohm speaker (2"). Follow the schematic diagram provided in connecting everything. Placement on the breadboard is not critical but try to get everything in the smallest possible space.

For output from the modem, find U27, a small 8 pin IC just behind the board above the main PC board and about center. Pin 1 is on the right rear of the chip (see picture). Be VERY careful in soldering a small wire to this lead. This will go to the input of the amp through the 100k resistor then the pot for volume control.

As far as mounting the speaker, it should fit in just to the front of the rear mounting peg on the cover (the one near the rear of the cover). Determine the exact location for mounting that will not interfere with the modem circuitry or the amp board. Draw a circle around the speaker then drill a few holes in the cover to allow the sound to come through. Mount the speaker using Perma-bond or whatever you want to use. (Perma-bond works best). Connect one speaker wire to the negative side of the 220uf cap and the other to a ground point on the amp board. Run the ground lead of the amp to the right side of either cap on the modem board (behind the regulators) or to the center lead of either regulator (the former would be better and easier).

A good area to mount the amp circuit (if made small enough) is on three layers of double sided sticky foam tape. You can get it in most stationery sections. Mount it between the two IC's next to the power supply caps and between the hole for the cover mounting peg so it clears when the cover is closed. The speaker wires should be long enough to open the cover and fold it out to the right side so it lays flat.

So far, so good. If you don't have butterflies in your stomach yet you will soon. Now it is time to power up and see if it works. You should hear some noise from the speaker. If not, try adjusting the 10k trimmer pot on the amp. Set it so the noise can be heard but not disturbing. You may want to turn it up or down later. Boot your terminal program and type in 'AT'. Your modem should respond 'OK'. Now type in 'ATO'. This will take your modem off-hook and give you dial tone. You should hear it now. Hit enter and you will get the NO CARRIER message. Now, dial up a BBS and listen to the tones, and the connect signal. When you get the connect message the MC light should go out and the amp should be silent.

If everything worked, CONGRATULATIONS! If not, shut it off, check your wiring and call for help.

Good luck and happy communicating!

PUNN--Portland User's of Ninety Nines

Walt Morey

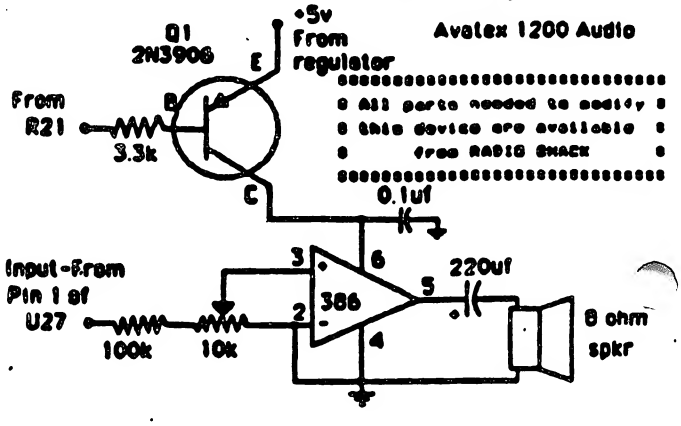

EDITORS NOTE...Members who did not attend the last Workshop at my house missed one terrific meeting. Actually we were packed in like sardines but the meeting was a very informative one. Those present were introduced to the latest Funlwriter Vn 3.3-D dated 13 July 86, As you know, this is from Funnelweb Farn in Australia and we had the program in the club the 20th of July. Gary said he would review it in next months newsletter. We also were treated to a demonstration of Disk Master I which is written-up in this newsletter and will be demonstrated at the next meeting.

We recently received a letter from Ronald G. Albright, Jr. who is the TI Forum Editor at Computer Shopper. It said-"Thanks for continuing to send your group's excellent newsletter to the Computer Shopper. In the October issue (the one I am working on right now), I plan to mention that folks can get a years subscription to your newsletter for $10. I hope I am reading the newsletter information correctly on the price, I think it is absolutely one of the best I have seen. Again, I appreciate your support of the TI forum column at the Compuer Shopper, Sincerely, Ron"

Below is a replacement for last months Schematic of Mac Swopes Auto Dialer. If you wish more information about it or the program to run the dialer, contact Mac Swope, 3880 Warrington Cove, Memphis, Tennessee 38118 (901)363-3880. ...Al Doss

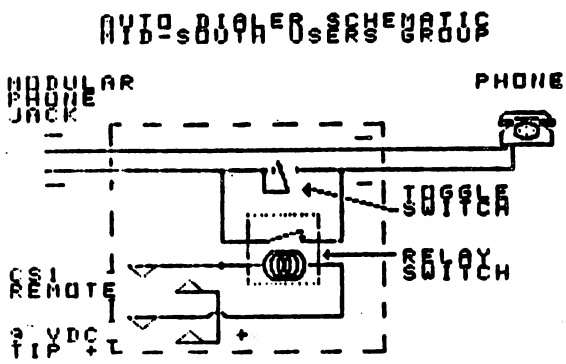

Computer system requirements:
Editor Assembler cartridge
32 k memory expansion
1 RS-232 card 1
1 Acoustic modem 1
(may be req'd depending on program)

Directions for building AUTODIALER
Hardware available from Radio Shack
Required components

Modular jack casing:	
R/S # 279-355	$2.19
Reed relay, 9 or 12 vdc	
Normally Open contacts	
R/S # 275-233	$1.49
Toggle switch (micro mini SPST)	
R/S # 275-624	$1.49
Subminiature phone jacks (2)	
R/S # 274-292	$1.19/pr
Male modular telephone plug w/ wire	
R/S #279-390 (or longer) # .99	
5 or 9 VDC power supply	
Tip MUST be POSITIVE	
R/S # 60-3053 or equiv.	$5.95

AUTO ANSWER/AUTO DIAL INTERFACE

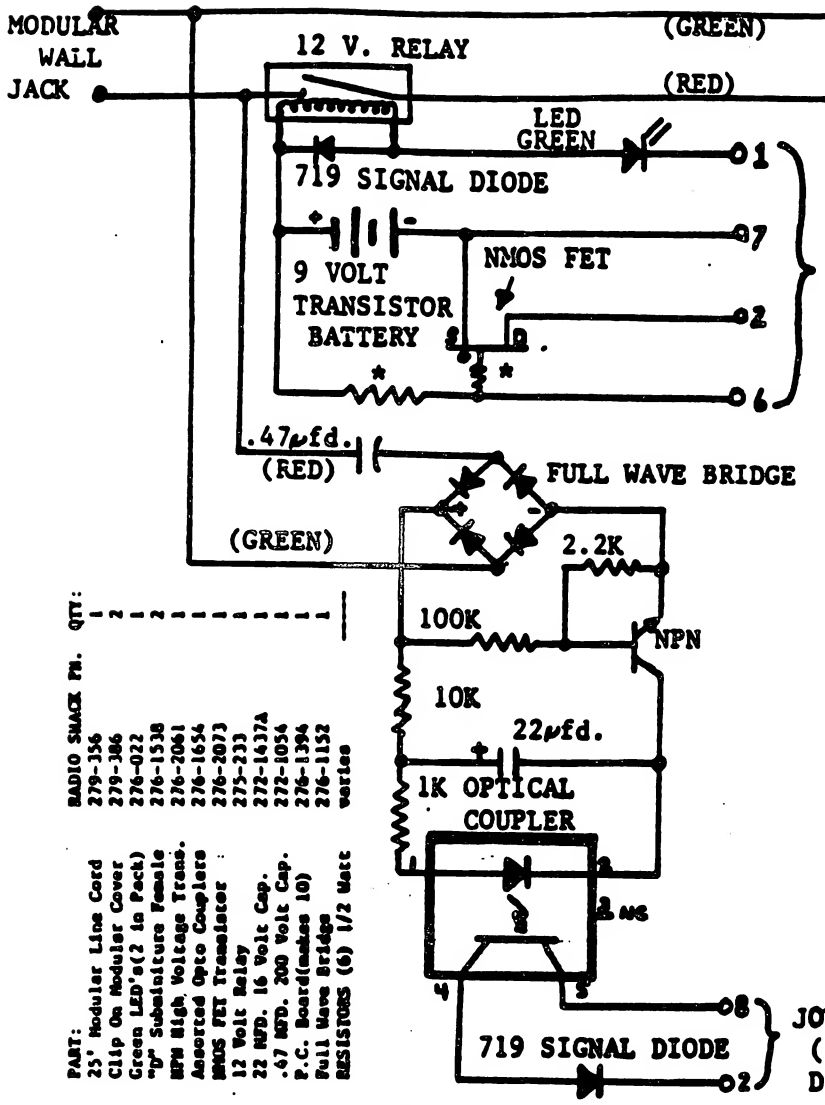

PART:	RADIO SHACK PN.	QTY:
25' Modular Line Cord	279-356	1
Clip On Modular Cover	279-386	2
Green LED's(2 in Pack)	276-022	1
"p" Substrature Female	276-1538	2
NPN High Voltage Trans.	276-2041	1
Assorted Opto Couplers	276-1654	1
NMOS FET Transistor	276-2073	1
12 Volt Relay	275-233	1
22 MFD. 16 Volt Cap.	272-1437A	1
.47 MFD. 200 Volt Cap.	272-1054	1
P.C. Board(makes 10)	276-1394	1
Full Wave Bridge	276-1152	1
RESISTORS (6) 1/2 Watt	varies	

CASSETTE CONNECTOR (9 pin D type conn.)

JOYSTICK (9 pin D Conn.)

The circuit to the left is used to answer/dial(pulse), and the one below it is used to detect a ring.

This AA/AD device was designed by RON GRIES of the NEW HORIZONS CLUB. It should be built only by persons who understand the underlying circuit theory.

For more information or assistance, call RON at: (419) 874-1414

This circuit will require some software, so be sure that you can write or obtain the software.

* These two resistors may be in range of 10K to 5 meg. ohm.

THE MULTIPLE DRIVE CONNECTION

by: Bud Wright

This project is for anyone interested in adding more than the maximum drives of 4 to your TI-99/4A. If you have never built any electronic projects before, please get some help first. I will not be responsible for any problem that encures from trying this project. What I'am saying is: "if you whuff your disk controller and/or system, don't blame me!". Make sure you have all the schematics for the disk controller and console before continuing, and double check all connections before applying power to any part of this project. If you have doubts, get some help!!!

I am running this project on my BBS, it allows access to six ds/dd drives or what I call "sub boards". To see it in action call: TIABS 614-442-1852 3/12/2400 baud 8-1-N 24hrs a day, seven days a week.

PARTS NEEDED:

1ea.	1N4004 diode or equiv.
1ea.	DPDT 12V Relay
1ea.	9 pin connector female (cassette port)
1ea.	12V power supply (I use 12V from external drives).

NOTE: You can use a 5V relay in place of the 12V relay, but make sure your power supply is 5V also! The relay can be a small pc mount type (very low current is being used through the relay contacts).

Below is a schematic drawing that has to be wired up to your system and disk controller cabling. I recommend mounting the relay on perf board and enclosing the board in some type of box. Keep all connections isolated from touching any part of the computer or any other connection!

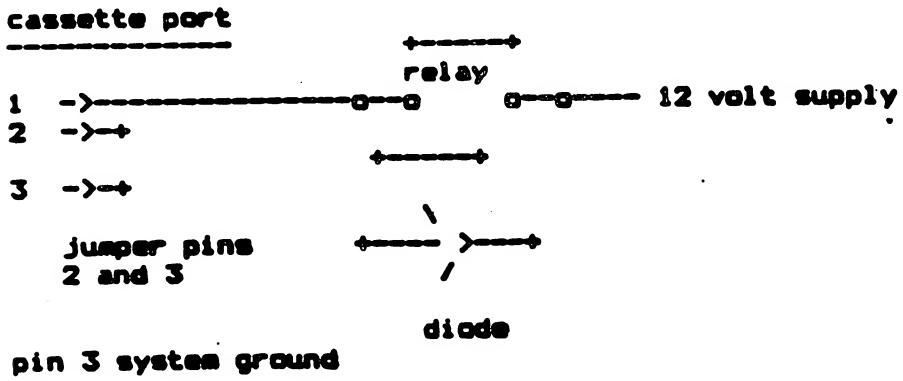

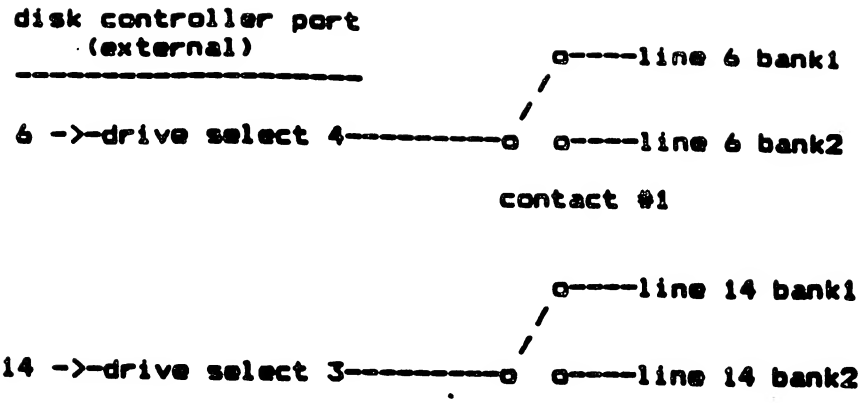

First, we will go over the cassette connections. By looking at the console schematics you will see that pin 1 of the cassette port is the collector of a NPN transistor and pin 2 is the emitter of the same transistor. By jumpering pin 2 to 3, you are making the emitter ground potential. IMPORTANT.. if you use a separate power supply other than the external +12v from the disk drives, the grounds must be common with each other. Solder a wire from your power supply ground to pin 3 of the cassette port! This will provide a common ground for the console and your external power supply. If you use the external drive +12v, then ground will be provided thru the drive cables and you don't have to solder ground to pin 3.

The default operation of the relay will be energised. Resetting to the title screen turns the NPN transistor on, which in turn energises the 12v relay. To operate the relay through software you will need this small routine in assembly. I use a CALL LINK from Basic, routine below:

```
MREG    BSS 32
        DEF BANK1
BANK1   LWPI MREG
        CLR R12
        SBO 22
OVER    LWPI >83E0
        B >006A

        DEF BANK2
BANK2   LWPI MREG
        CLR R12
        SBZ 22
        B OVER
```

By doing the link the relay will stay in that state until it is turn on/off with the sister routine. This is the only way (I know of) you can access the cassette motor drive circuit in the console.

Ok now let's look at the connections to the drive cables. Break line 6 and 14 off of the cable coming out of the external drive port. Make sure there is no connection between these lines and the drives. Take the end closest to the drive controller port and attach these two wires to the common poles of the DPDT relay. Next open the lines (6 and 14) going to the two sets of drives 3 and 4. Make sure there is no connection between lines 6 and 14, there will be four breaks you will have to make, two on each drive bank set. Connect wires closest to drives to the normally open and normally closed contacts on the relay. Well that's it, if I explained everything that needs to be explained, you should now have six functional drives!

MULTI_TASK_DRIVE_MODIFICATION

By C.B. Doan

When converting your system to take advantage of a MYARC Memory Expansion Card, the benefites are many but, one drawback is when defining the RAM-DISK as DSK1, the disk controller ignores the original DSK1 in the expansion box. To overcome this problem I removed my Teac 55B drive from the box and proceeded to make it into a drive that would accept being called either DSK1 or DSK3. First the factory jumper had to be removed from DS0 on the selection pinblock. I installed a Radio Shack micromini toggle switch in the upper left hand corner of the face plate of the disk drive. From there I wired up the leads from the SPDT switch (#275-625) to the DS0 and DS2 pins of the pinblock. Due to the fact my drive was a half height unit, it also intailed bending over the pins to solder the jumper wires. With this modification in place it allows me to use my original DSSD drive as drive one when using programs such as TI-ARTIST and other protected disks that MUST run in drive one. As well it allows me to format the RAM-DISK as drive one and take advantage of it's access time when using drive intensive programs such as Editor Assembler or TI-WRITER. At this time I normally leave the switch set to DSK3 and keep a backup copy of the programs on the RAM-DISK.

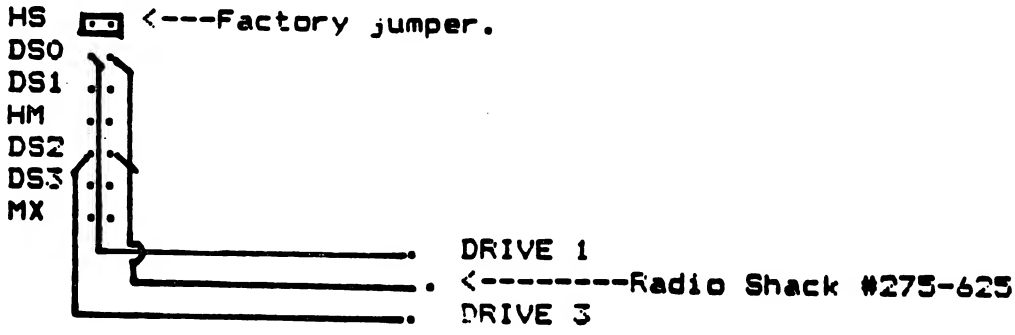

This article was reprinted from the August, 1983 issue the New Hampshire 99'ers Users Group Newsletter of Manchester, New Hampshire.

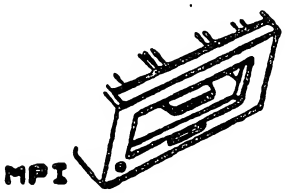

ADDING A SECOND TI DRIVE...
(a.k.a. IT WORKS FOR US!)

Helene M. LaBerville & Ellen J. Rule
121 Camelot Drive - Bedford, NH 03102
NH 99'ERS USER GROUP

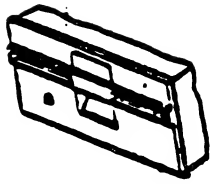

SEARS (Manchester, NH) is currently closing out on their TI99/4A inventory. At this writing they had over 20 internal disk drives (PHP 1250) remaining at $99 each. They have both the SHUGART 400L's and MPI 51 5" in stock. We wanted a second drive BADLY! Since the cheapest, new, TI external drives were $135, and our funds were limited, we decided to "fashion" our own.

Armed with copies of five different articles on the subject, we abstracted "the best" and "the easiest" advice. You will need the following parts:

The bare disk drive.....$90.00
An enclosure (vertical mounting) & power supply..... ~ $42.00
(One of our members sells power supplies for $15,
and we found an enclosure at a flea market for next to nothing.)
A 15" drive cable with two 34-pin edge card connectors....$6.00 (we had one)
A 4 position DIP SWITCH (RSR 275-1304A)....$1.49
A replacement resistor pack....FREE from TI

TWO DRIVE CONFIGURATION	INTERNAL	EXTERNAL
#1.*	SHUGART	SHUGART
#2.	MPI	SHUGART
#3.	MPI	MPI

*On multiple drive set-ups, you must replace the termination resistor pack on all SHUGART drives except the last drive in the series. If the SHUGART is to be used with other TI drives (MPI's), install the SHUGART as the last drive in the series. A call to TI-CARES will get you a FREE replacement resistor pack (a 270 ohm resistor soldered onto pins 9 and 18 of a 14-pin DIP header). You may choose to just add a 270 ohm resistor between these two pins in the DIP socket itself. Our drives cost US less than $75 to assemble.

Only configuration #1 requires the replacement resistor pack. The INTERNAL drives in configurations #2 and #3 DO NOT require modification. Since we opted for configuration #1 (for aesthetic reasons), we had to replace the termination resistor pack on the internal drive. Because drive 1 gets most of the workout we also decided to use our newest drive as drive #1. In any event, if you opt for dual drive configuration #1, you must replace the termination resistor pack with a 270 ohm resistor pack:

>Turn off the Peripheral Expansion System and disconnect the power cord from the back of the unit. CAUTION - WAIT TWO MINUTES AFTER TURNING OFF THE UNIT FOR POWER TO DISCHARGE BEFORE PROCEEDING.

>Remove the top of the PES by depressing the latches on the back edge of the top and pulling up.

>Remove the four screws holding the internal drive in place and gently slide the unit out of the compartment. You need not disconnect the cables that attach the unit to the PES and controller card unless you decide to replace the drive with the newer one.

>Locate the termination resistor pack, noting the position of pin 1 in relation to the drive. Using a very small pocketknife blade or a small screwdriver tip, CAREFULLY pry the resistor up and out of the DIP socket. Take care not to bend the pins in case you need to use the resistor pack later.

>Insert the new resistor pack with pin 1 (the number "1" is either molded in or represented by a notch) occupying the same position that pin 1 of the termination pack occupied.

>Reinstall the disk drive, expansion system top, and power cord in the reverse order of the procedures above.

Because many of you may not have received the special cables or an adapter board with your TI disk controller card, lost them, or have a Corcomp Card, we have adapted John Hamilton & Ron Rutledge's (Central Iowa UG) method for adding a second drive... replacing the shunt pack with a DIP SWITCH, thus dispensing with the need for special cabling and adapter boards. The shunt pack is a workhorse. It controls the following:

Pins 1-14 ... Head Select - head is loaded by drive select signal
Pins 2-13 ... Drive Select 1 - selects drive as #1
Pins 3-12 ... Drive Select 2 - selects drive as #2
Pins 4-11 ... Drive Select 3 - selects drive as #3
Pins 5-10 ... Multiplex - means multiple drive configuration
Pins 6- 9 ... Door Lock - means drive in use when door is closed
Pins 7- 8 ... Head Motor - head is loaded by motor signal

4 position dip switch

The TI drives all come as Drive 01. The adaptor boards and 'special cables' are 'configured' to side-step the shunt pack and select the proper drive in multi-drive set-ups. Many of our members have encountered problems with the TI method. The Hamilton-Rutledge method has worked for us since day one (over two months). I even used this method to configure a TI SHUGART Drive to my RS Color Computer, and it is working great!

For the external drive then, we recommend that you first remove the thin aluminum housing that covers the drive. This allows for more airflow to occur, next:

>Fasten the disk drive to the enclosure floor.

>Attach the 4-pin polarized plug from the power supply to the 4 pins on the drive's board, then attach the grounding wire from the ps to the rear of the drive. CAREFULLY replace the shunt pack with the DIP SWITCH. As this is your second drive, position 01 should be ON, 02 should be OFF, 03 ON, and 04 should be OFF.

>Attach one end of the drive cable to the edge card on the drive (note that there is a 'key' in the connector which mates with the 'hole' in the edge card). Connect the other end DIRECTLY to the disk controller card.

>Now secure the enclosure cover in place.

>Test the drives by cataloging a disk on each of them.

We must acknowledge the following people who have provided us with the basis for this article: Ed Lawson and Richard Bailey of the N Hamp. 99'ER UG, John Hamilton and Ron Rutledge of the Central Iowa UG, and John Worthington of MANNERS.

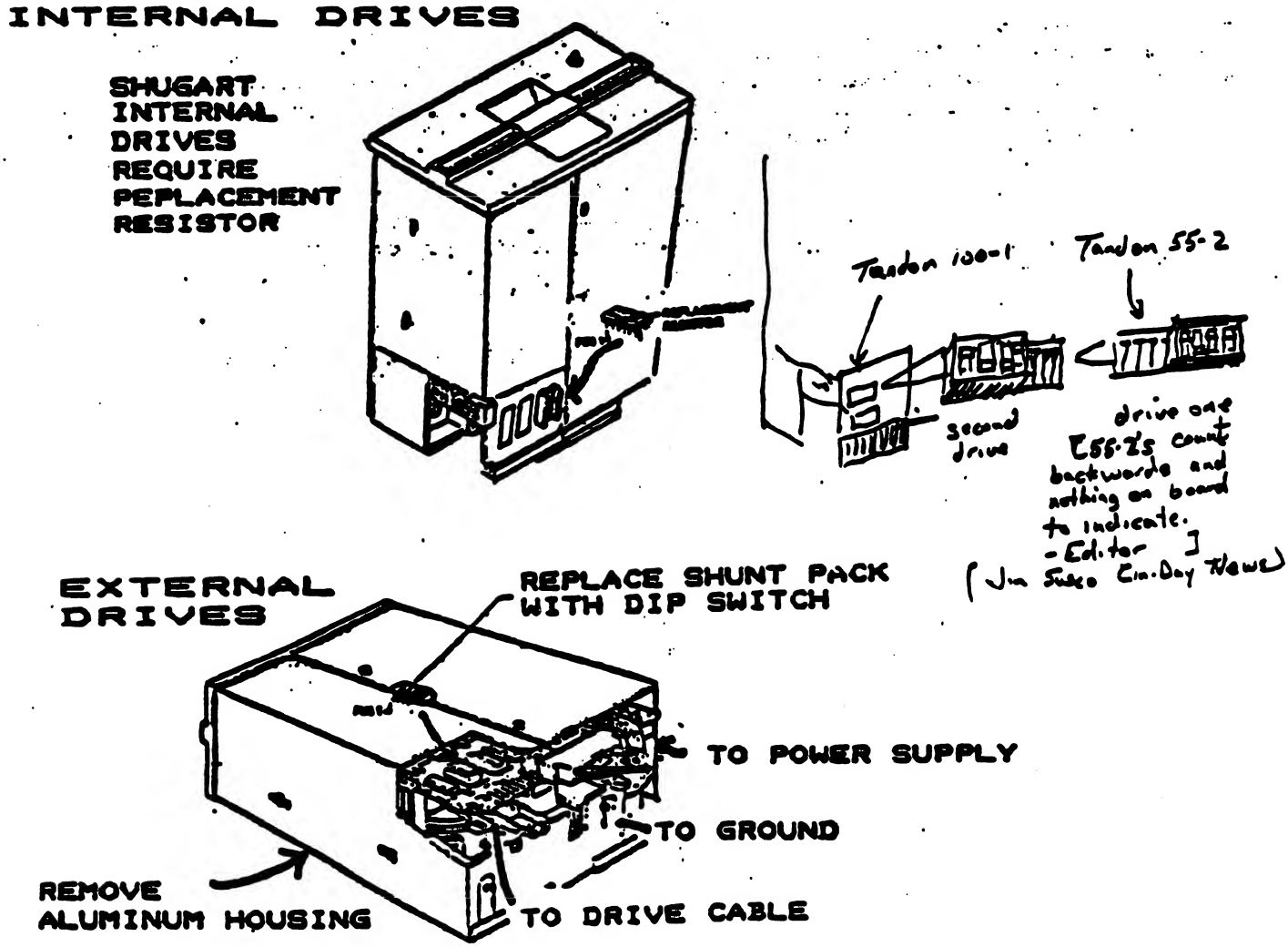

DOUBLE-SIDED DISK HOLDS 254 FILES

By BRUCE HALL

For all you TI'ers out there with double-sided drives that would like to make more efficient use of your disk space but would like to keep certain programs separate like TI artist and P-term but don't want to use a whole disk for each program or you want to store more than a hundred and twenty-seven files [example: graphics characters], I have a simple solution, by installing a switch, you can make your second drive look like two single-sided drives.

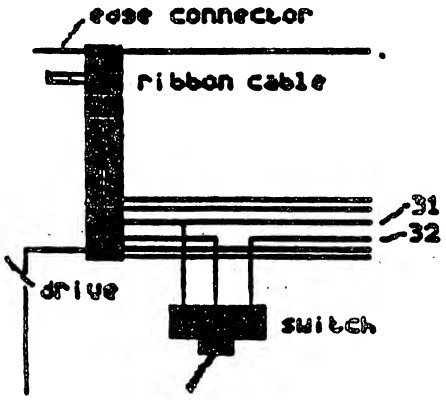

The parts needed are as follows, solder, wire, electrical tape, S.P.D.T switch(ex.radio shack#) and a few tools. The theory is fairly simple, the computer selects side zero or side 1, by forcing the head select line to go high for side zero and low for side one. For single sided operation the head select is always high. By cutting the wire for the head select (wire 32) and hooking the wire on the side of the disk drive to the common of the switch (see ex.) and hooking the wire coming from the disk controller to one of the outer terminals and the other outer terminal of the switch to a logic ground (wire 31). With the switch in the position shown in the ex. the drive would act normally and all formatting and copying for ss will by on side zero. By toggling the switch you ground the head select line and force the drive to select head one. You can now format side one like a totally separate disk! When formatted and used in this way, all the information stored on side one is unrecognizable in normal mode. This way you can have 127 files on one side of the disk and another 127 on the other, or two programs totally separate from each other. Also, information stored this way on side one is not accessible to anyone without this modification.

To install a switch, remove the disk drives from the P box, separate the drives, the switch will be installed in the ribbon cable between drive one and two. This will leave drive one unaltered, but allow you to manipulate drive two. While looking at the connection on the back of the drive you will notice in the edge connector you have an alignment slot in the PC board. This is the top of the connector. Now that you know where the top of the connector is, look at the bottom. You can see the individual wires formed in the ribbing connector, the bottom wire is # 34, count up two wire positions and that will be the head select line. Carefully, separate wire # 32 and # 31 from the ribbon cable, cut line #32 in half and remove a short piece of insulation from # 31, now hook the wires for your switch as shown in the diagram, making sure you have sufficient wire to place the switch in a convenient location. Solder and tape all connections and reassemble in reverse order.

I hope I haven't been to long winded, but this was done late at night, with much tolerance from my loving wife... I have tried this out on my own machine and it still appears to work. If you have questions or problems, please give me a call. My number is (206) 432-0739.

TECTIP 1

by Harold Hoyt
and
Gene Breer

We recently connected an IBM Qumetrak DS/DD disk drive in place of the SS/DD Shugart that we had been using for more than a year without having any problems. We had used a 3 way connector to attach the PE box power supply to the external drive. It is supposed to be OK to do this if you are using two "low power" half height drives instead of the older original equipment drives that use a lot of current. When we accesed the drive to test it, the PE box power supply was unable to supply enough current to operate the drive and the file READ aborted, the program to get lost and the non volital RAM disk files became volitale and were lost, and had to be reloaded.

At this point, we felt that it was a good idea to design a test fixture to measure the power requirements of a disk drive. The design specifications we decided on that was easy to build, inexpensive and easy to use and understand. Unlike most hardware, it would be used only once in a while, when setting up a system. We purchased a drive expansion power cable and a drive power cable with wires attached. We could have just as easily started out with just the connectors, wire, inserts and a crimping tool, but it seemed easier this way.

Fig. 1 shows the result of our efforts. A male power connector is wired to a test fixture, which has 0.1 ohm resistors used as meter shunts in the +5 volt and +12 volt busses. The electric current requirement of the drives may be monitored by measuring the voltage drop across these resistors. Having such a low value of resistance allows current monitoring with negligible effect on the disk drive power voltages. Even at 1 ampere load current, the voltage drop is only 0.1 volt, yet connecting an inexpensive pocket voltmeter with a 250 millivolt range across the resistors allows reading up to 2.5 amperes since by ohms law, each millivolt drop across a 0.1 ohm resistor is caused by 10 milliamperes of current flowing through it. A low cost pocket voltmeter can often be obtained in the $20 range from places like Radio Shack. If a calibrated DC coupled oscilloscope with a 200 millivolt per centimeter deflection sensitivity is available, the transient performance of the power supply can be monitored. A 10 cm vertical deflection would be 2 amperes.

We added a range switch and range resistors so that a 1 milliampere meter movement with 43 ohms internal resistance will be properly calibrated to read 5 volts full scale on the +5 volt bus, 0.5 amperes full scale, 15 volts full scale on the +12 volt bus and 0.5 amperes full scale. When the Qume/IBM drive stepper motor was operating, the scale was pinned on the 12 volt current monitor. A DVM showed an average current of 0.75 amperes on the 12 volt supply.

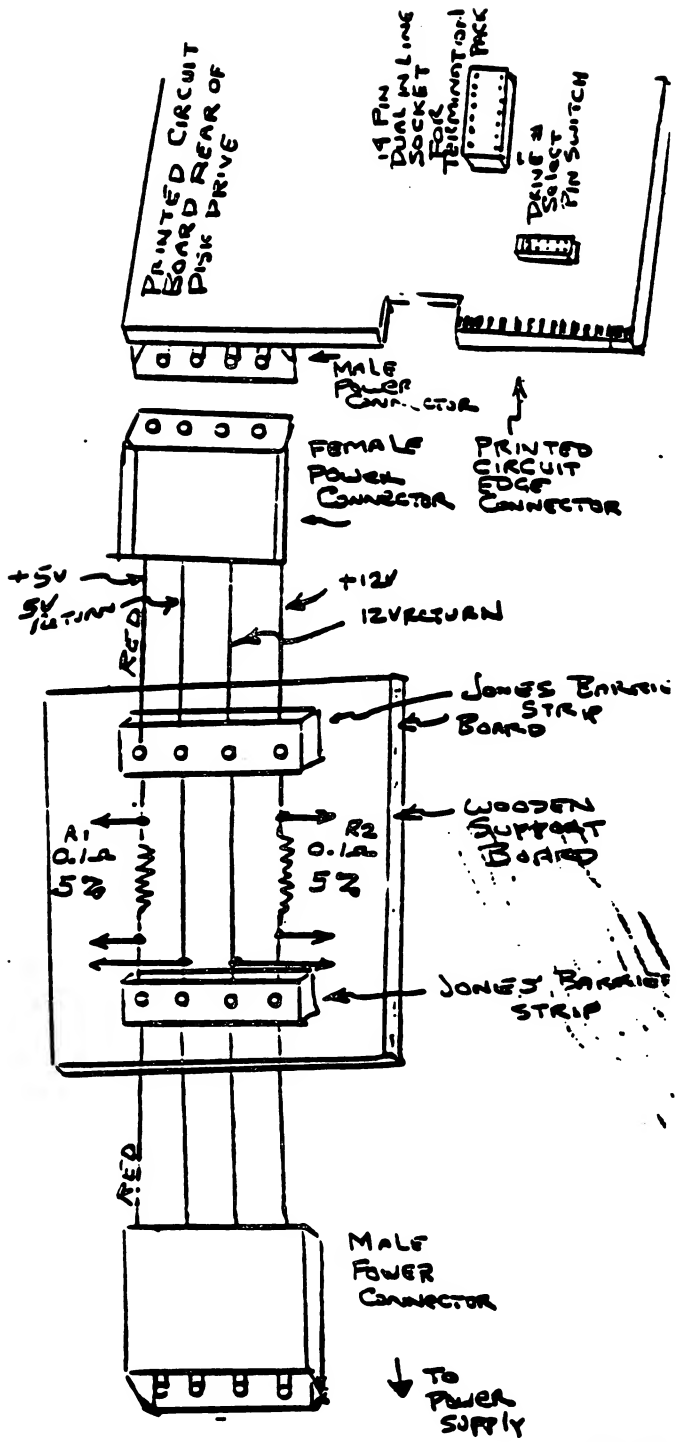

HSGR 2/9/88

Fig 1
DISK DRIVE TEST FIXTURE

DISK DRIVE POWER SUPPLY

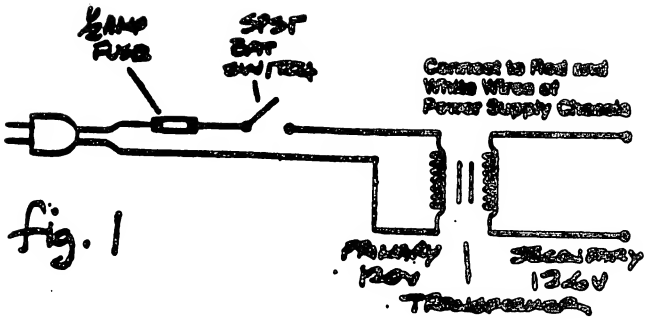

fig. 1

-5V NOT USED

fig. 2

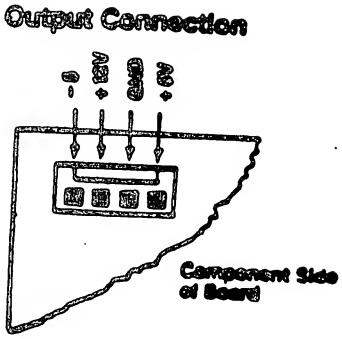

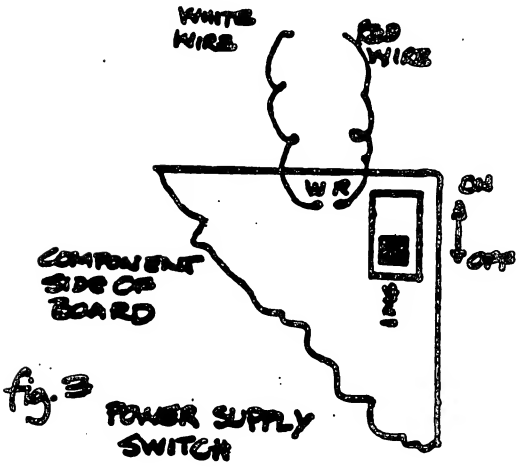

fig. 3 POWER SUPPLY SWITCH

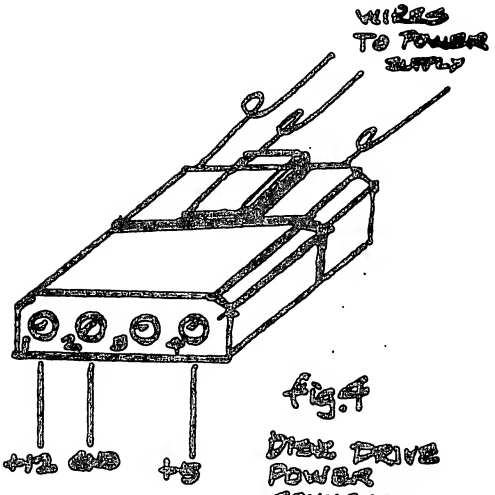

fig. 4

DISK DRIVE POWER CONNECTOR

NOTE- POSITION 3 NOT USED. THIS IS A KEYED CONNECTOR AND CAN ONLY FIT THE DRIVE SOCKET ONE WAY.

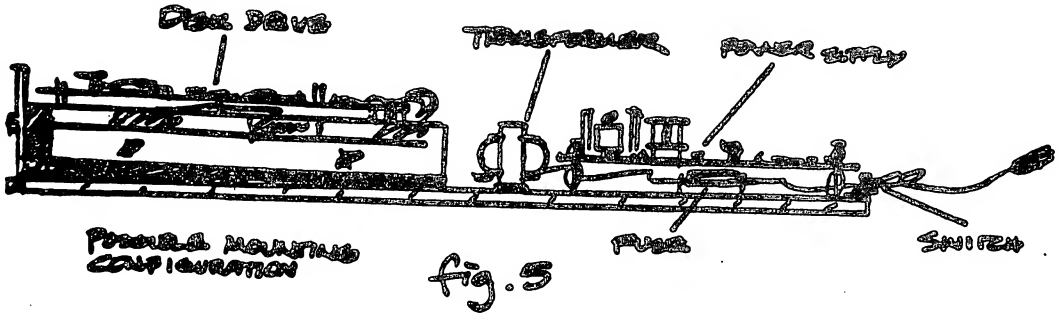

fig. 5

Then I recalled that the May '86 issue of MICROpendium presented an excellent article by Tony Johnson on building a super keyboard. I dug the issue out of my archives and it provided the principles, parts list and schematics necessary to make it all come together. He incorporated 4066 analog IC switches, DPST relays. and resistors to make his project work. It didn't take long to realize that he hadn't gone through all of that for nothing. The mechanical circuits of my DP momentary switches would not work. I studied his text and schematics carefully and it all seemed to fall into place. I started from scratch with a new perf board.

Each chip can accomodate 4 keyboard lines. The 4 cursor keys and the minus represent 10 lines, so three 4066 ICs were used. One more key can be added without adding a chip. The FCTN 1-0 functions are another matter. For reasons quite honestly beyond me, they require the use of DPST relays. I had only one such key, that being the TAB on the numeric portion of the pad. I wired it to act as a FCTN 3, or ERASE. This would make it easy to get rid of numbers entered in error.

The keypad was designed to be detachable so as to provide flexibility. Of course removed from the side of the console, the old TI flat cable, or other device, must be re-installed for the I/O. Guided by Tony's excellent tutorial, the project became a functional keypad with single key cursor control.

****

The keypads which Jim used for the above project were Stock #KP-15 ($6.50 ea.) from All Electronics, 6228 Sepulveda Blvd., Van Nuys. All Electronics also still has the following genuine original TI 99/4A surplus parts and some prices have dropped since we last reported:

Stock #	Description	Price $
PS-30	Console Power Supply	3.50
ACTX-1885	Wall Transformer and Cord	3.50
-------	Combo PS-30 & ACTX-1885	5.00
KP-48S	Beige Keyboard (new)	3.50
------	Black Keyboard (as is)	2.00
ACEX-3F	Fused Power Cord	0.40
TCC	Dual Cassette Recorder Cable	5.00
AVMOD	RF Modulator	5.00
TIY	RS232 "Y" Splitter Cable	6.50
DIN-RCA	A-V Console to Monitor Cable	1.50

They also have a store at 905 S. Vermont Ave. in Los Angeles. Charge card phone orders on 213/380-8000 from 213 & 818 Areas, 1-800/258-6666 from Ca., 1-800/826-5432 outside Ca.

****

HOMEBREW KEYPAD

Jim Edwards
San Fernando Valley 99ers

My initial motivation for building a TI numeric keypad was an article submitted to the LA 99er's "Topics" newsletter by Ken Johnson. It presented the TI99 keyboard schematic and defined the 15 wire assignments. It seemed a simple enough project to wire a remote set of keys in parallel with the TI board.

I rounded up a bare-bones keypad, perf board, and other assorted parts. I knew I wanted to incorporate a single key press for the "-" which normally required a shift and "/" to produce. Single press cursor control would be a welcome addition too. Knowing 2 circuits would have to be closed simutaneously, I picked up individual 2 pole momentary switches.

I wanted to incorporate a previous project of mine that relocated the TI flat cable using a 22/44 card edge connector, 25 pair telephone cable, and a home made male connector. An interupt switch for screen dump programs was added to the side of the case. And since I owned a Triple Tech card, I also wanted a remote and convienient "clear buffer" key.

With these goals in mind, the case was started using a single piece of sheet metal for the bottom and sides, plexiglass mounts and top, and an aluminum "shell". I've always felt that TI's black and silver console was an innovative and impressive design and I wanted to maintain it. So the key pad was styled to blend in with the 99.

Of course the real challenge was putting together the keys, circuits, and wires that would make the whole thing work. The numbers were a relatively painless process. Nevertheless, I found the original 15 wires quickly multiplying into a maze. The 2 pole momentary switches were doubly complicated and just did not work for the 2 key press functions. A FCTN 3 would be an "ERASE" about half the time and just a "3" the other.

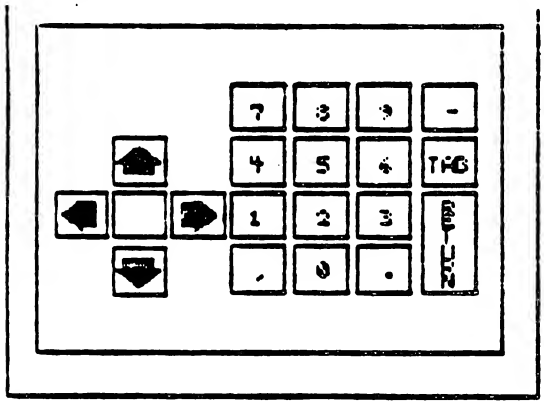

KEY PAD ARRANGEMENT
The key surrounded by cursor keys functions as the "clear buffer" key. Return is wired as <Enter>. Seven unused keys are available for future expansion.

(more)

CALL MENU Horizon DSR

I've recently sent away for and received a copy of John Johnsons Horizon RAMdisk menu program or ROS configuration disk. This is a joint venture by John A.Johnson and Michael A.Ballmann to maximize the advantages of the Horizon RAMdisk. Prior to this software only the most proficient programmers could fully benefit from the advantages of CALL xx statements on the Horizon RAMdisk. Now anyone can run X-Basic or Program Image programs from CALL statements. I often wondered how I would be able to utilize the CALL xx option available on the RAMdisk for programs I had on it. Now with this program I can access any Program Image File with a CALL xx statement or from the MENU selection that now replaces the original TI title screen. Also available on the MENU selection is any extended basic program that you keep on your RAMdisk. With a single keystroke you will load and run your favorite programs.

Another advantage of this program is the increase of available disk sectors. The new ROS included on the new disk is only 8K long instead of the original 12K long. This reduction in ROS length allows you to take advantage of another 16 sectors on your RAMdisk. You will now have 376(SSSD), 736(DSSD), or 992(256K) sectors free for disk space. They go into detail of what was changed to get this extra memory in the documentation so I won't.

IBM Double Sided Drives

I work for a large corporation who uses IBM PC's in a lot of their office areas. A lot of these machines were originally purchased with a single full height 360K drive(DSDD) and a 10 or 20 meg hard drive. Now that the people in the office have been using the machines they have developed skills requiring two floppy drives. What this means is removing the single full height drive and replacing it with two half height 360K drives. Since no one wants full height drives anymore, status ya know, we TI'ers can have them for the asking. I have been able to aquire about six of these drives to date. I have modified the jumpers in the resister pack to work in my two systems. Now of the six, two were in marginal condition. In fact I only kept them for spare parts. I already replaced one board on one of the good drives from one of the spares. I have seen MPI, Tandon, and an IBM made in Tiawan.

TANDON #TM100-2A

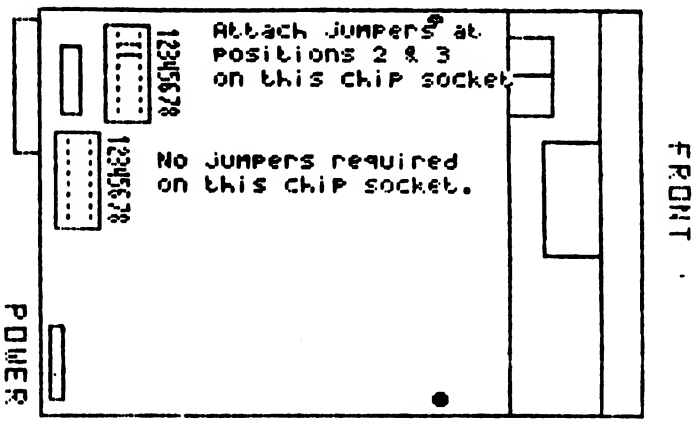

Top View Printed Circuit board.

Modifying the drives to work on your TI may only require a 30 watt soldering pencil or a couple of jumper pins. On the Tandon drives they were nice enough to supply you with IC sockets. On these you only have to put jumpers in pins two and three of the one IC socket. The other IC socket remains empty.

MPI and IBM Type 0384-002 Disk Drives.

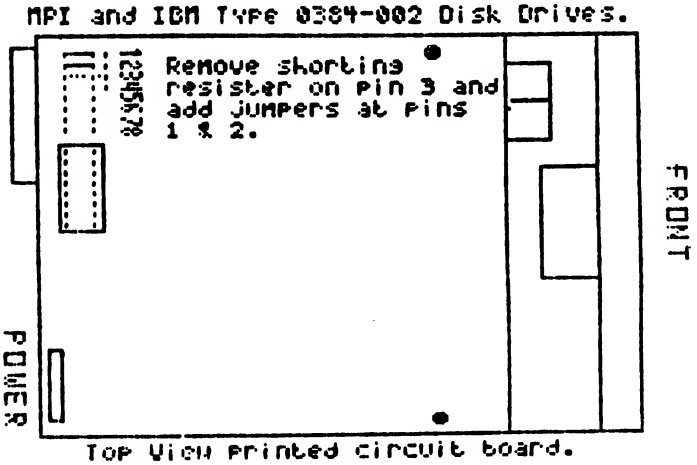

Top View Printed Circuit board.

(IBM Drives Continued)

On the MPI and the IBM drives you must unsolder a jumper resister on pin three and add jumpers to pins one and two. Now on these drives you don't have to worry about what the drive number is to position the jumpers correctly. Both my number one and number two drives have their jumpers in identically and they function correctly. Please don't ask me why this works on IBM drives and not on the TI drives. Anyway on the IBM and MPI drives there is no IC socket here to place the jumpers into. You must look closly at the printed circuit board to find where the IC socket should be, the holes are still there, and find the shorting resister thats in there. If this resister is not removed the drive will not function correctly in your system. It is probably a solid black color. After removing the IBM jumper you must add your two jumpers to pins one and two of the fourteen hole pattern where the IC socket should be. Now your jumpers must be within the fourteen hole pattern of where the IC socket shoud be. Do not try to follow where the IBM jumper went to, it was only in the one side of number three hole and the other end was in a hole outside of the fourteen hole pattern. I don't know how to make this any clearer, if you have doubts, consult someone more familiar with the drives.

There are companies that repair or replace IBM disk drives for $30 or $40 dollars each, so if someone would like one of my two spare parts drives to use as a trade-in just ask. Its free. The drives have all of their parts intact so just present it to the repair company and they will repair or replace it.

RAVE 99 Keyboard Adapter Kit

In the last newsletter I told you that I had sent away for the RAVE 99 IBM Keyboard Adapter Kit. Well its finally assembled and this issue of the newsletter is first to be published with it. First let me say what a pleasure it is to use a full size keyboard and single key Functions. Ok, so much for the nice stuff. The first criticism I have is the value of the kit. The way I figure it RAVE 99 is getting around 300% profit on a keyboard adapter kit. Total actual cost of the components at my estimate would be around $25.00, maximum. Not bad for two Eprom's, an IC, and a printed circuit board.

The assembly instructions were good but the references to the optional reset and load interupt key were annoying. Apparently someone at RAVE 99 felt that something could be gained by leaving out half a dozen parts for an optional feature. I don't know why they would do this because they don't sell a assembled board without the options.

Anyway, after I installed the board in the computer I was left with a large gaping hole where the keys used to be in the console. Ah yes, RAVE 99 has the fix for this, for only $11.95 they will sell you a piece of black plastic to cover your hole. I used a piece of black plastic I found at work, cut it to the proper size, drilled the hole for the keyboard connector with a small hole saw, and attached it with double sided tape. Perfect. Total additional cost, $0.00.

The only problem that I am having is I can't get the system reset, Alt. F10, to work. I have to use the Alt. + to do a software reset. To do a reset after inserting a cartridge I have to power down the console. Rave99 suggested I didn't have the trace on the grom connector cut correctly. I still have to check that yet.

Some people, I have heard, had a problem getting used to pressing the Escape key to initilize the keyboard on power up. I have not had this problem, it just becomes part of the routine of turning on the system.

DISCUSSION OF ATTACHING 10 FUNCTION KEYS TO TI-99/4A

by Gary Bishop, Cedar Valley 99ers (Iowa)

The original 47 key keyboard installed in the console has a matrix switching arrangement using momentary normally open contact keys, except for the Alpha Lock, which is an alternathing closed or open. The martix arrangement and keyboard are designed to keep the hardware cost as low as possible. This is evident in the problem you encounter the first time you go to look for the '?' (question mark) key. You must hold the Function key and 'P' instead of the normal typewriter location. Many such shortcomings exist in the keyboard layout, and I will address each one in detail in this series of articles.

Before discussing any changes to the keyboard, you must understand the current arrangement. A portion of the key matrix is reproduced below:

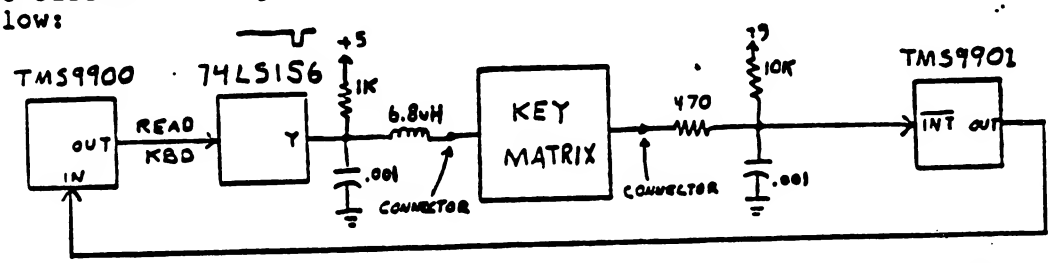

If you are not handy in reading schematics, all this means is: the software inside the computer tells the TMS9900 microprocessor chip (that's the brains of our console) it is time to see what the keyboard is doing. The microprocessor then tells the 74LS156 to turn its output on, which energizes the key matrix. Now, if a key happens to be pressed at this time, the 74LS156 output is connected to the input of the TMS9901 chip, which in turn reports back to the microprocessor what key is pressed. If no key was pressed at that time, the TMS9901 chip reports 'nothing is happening' back to the brains. The shorthand for this stuff is: scan the keyboard, report back what key is pressed.

Now, the thing we called a key matrix in the above figure has many internal connections, the 74LS156 has 6 outputs for the keyboard instead of one, and the TMS9901 has 8 inputs instead of one. The principle is still the same, though, some output must make it thru the key matrix to some input, and then the computer recognizes which key is pressed.

I will start by describing how to have 10 separate keys for the Function-1 through zero keys on the top row of the keyboard. As you know, you must hold down 2 keys on the keyboard to accomplish this. If there was a keyboard that had two separate contacts in each key, the job would be easy. Such a keyboard is very hard to find. We must come up with a way to fool the computer into thinking the correct 2 keys are being held down, when in reality we are only holding down our new 'F1' or Function-1 single key. A convenient way to do this is with diodes, as illustrated below. The numbers above the dots are the connector pin #'s on the present keyboard. The keys are labled the same as they are found on the top of our present keyboard. To provide a 'F1,' we must connect 2 output lines to the same input line. The diodes accomplish this by allowing both

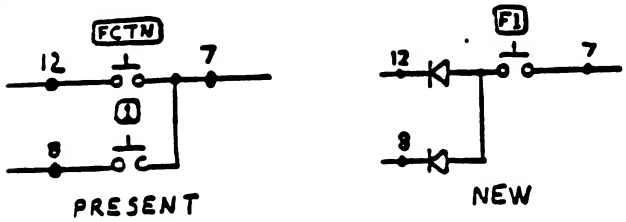

(more)

outputs to be connected to the input line, but not allowing other signals to back up. Remember that there are many other keys attached to the points shown, so the diodes prevent the computer from recognizing any other keys at the same time. You might ask if this doesn't confuse the computer? No, as described above, the keyboard is scanned. This means only one output of the 74LS156 is active at a time, then the corresponding input is determined. The computer then turns off that output and turns on the next one. This continues until all outputs have had a chance to be active, thus the name 'scan.'

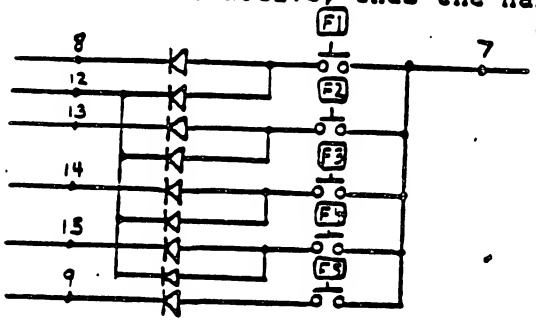

Well, this trick works pretty slick for a while. The reason this is so simple is because there is a shared line in the key matrix between the original keyboard's 'FCTN' key and the keys '1', '2', '3', '4', and '5.' The schematic for the rest of new function keys F1 to F5 is on the left.

Notice I said this trick works for a while? This is because when we come to the '6' key, we find that there is no shared line between it and the 'FCTN' key in the keyboard matrix. The situation is as follows:

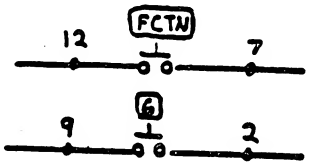

At this point, simple diode tricks run out, and we must use simple logic chips or gates to do the job. The problem is to press one key, and connect both outputs to their respective inputs without connecting them to each other. The chips that do this are 74LS01 and 74LS04. The LS01 chip has an output that can be tied together with other outputs when necessary. This property is technically called <u>open collector</u>.

Well the circuit for F6 is:
The chip provides us with the NAND function, which means both lines going into the gate must be at +5 volts to privide a 0 volt output. When the switch is pressed, this condition is met. This allows each scan output to be connected to the correct input <u>without</u> interferring with each other.

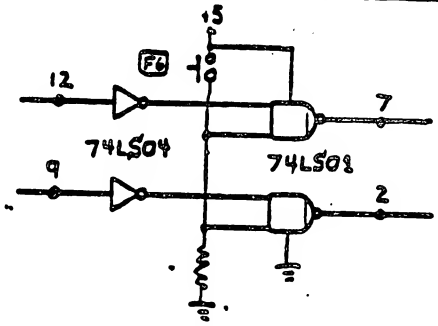

We can run the press on this circuit to provide the other 'F' keys, as we will show.

Discussion of this approach: It gets the job done, but requires active circuitry (circuitry that requires power and ground to do their job). So now, power and ground must be brought out to the 'new' replacement keyboard or pad. There is also some slight additional power consumption, but the console should be able to handle it. As long as power and ground are being ran to the keyboard, some other neat tricks can be incorporated.

(more)

Alternate methods of accomplishing the function keys are PROM lookup tables, dual contact switches, relays, transistor switches. Most of these alternates are unattractive due to expense.

There is some duplication in this approach: note that for each of the F6 to F0 keys, we have an inverter on the line connecting to pin 12. We only need one inverter to do the job for all the gates. The schematic for these keys is at the right.

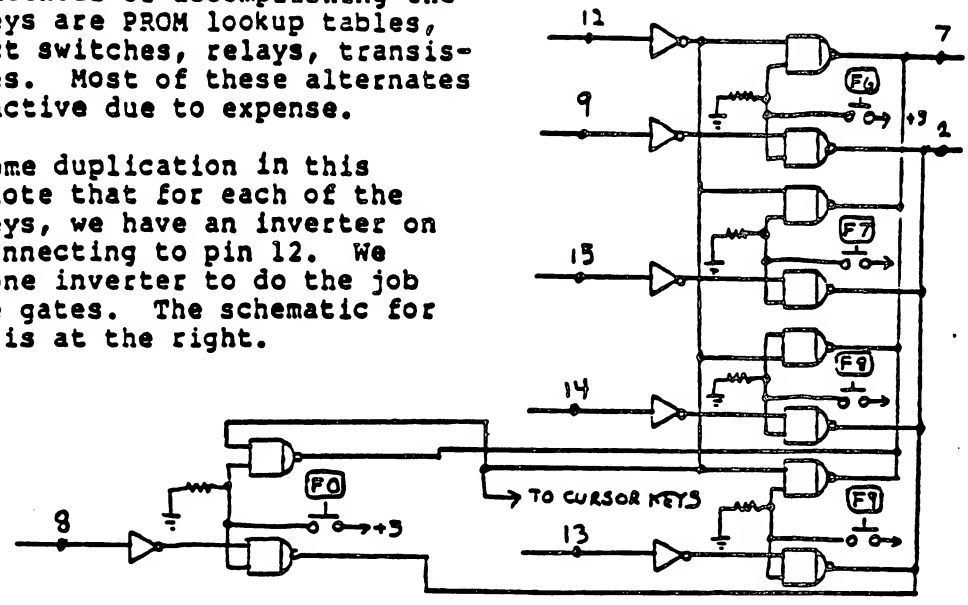

How about cursor control? The FCTN-arrow keys can be tackled in much the same manner as above. We will start with the up arrow, or FCTN-E.

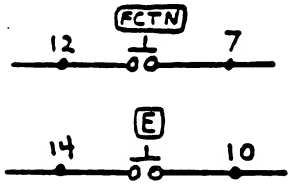

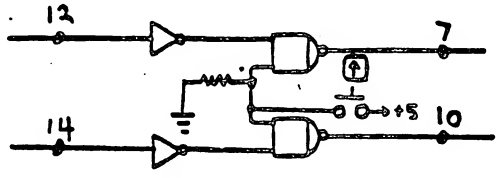

A similar approach is used for each of the other 3 cursor keys, and the inverter for the function keys above can also be used as the input for this circuit. The cursor control schematic is:

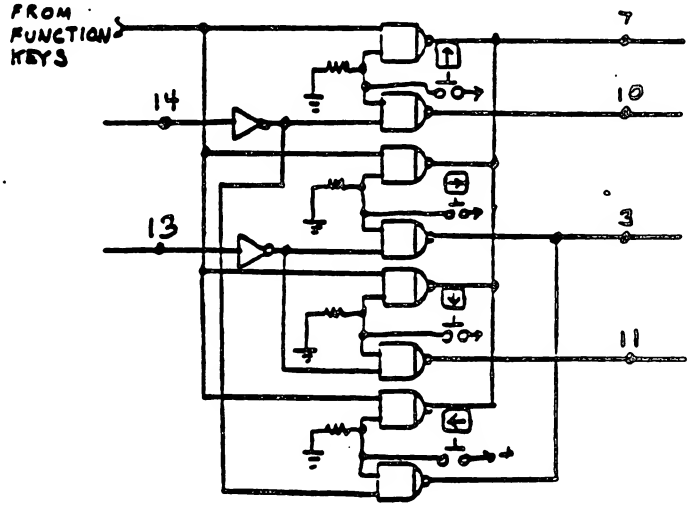

It should be noted that many of these inverters can be combined with the function control schematic.

(more)

Next time, I will discuss liberating those other keys from the FCTN prison, such as: ~ [ ] _ ? ' " | { } \ ` Also, watch this column for an illuminated alpha lock key, backspace with delete, auto-insert, and more! The complete schematic is:

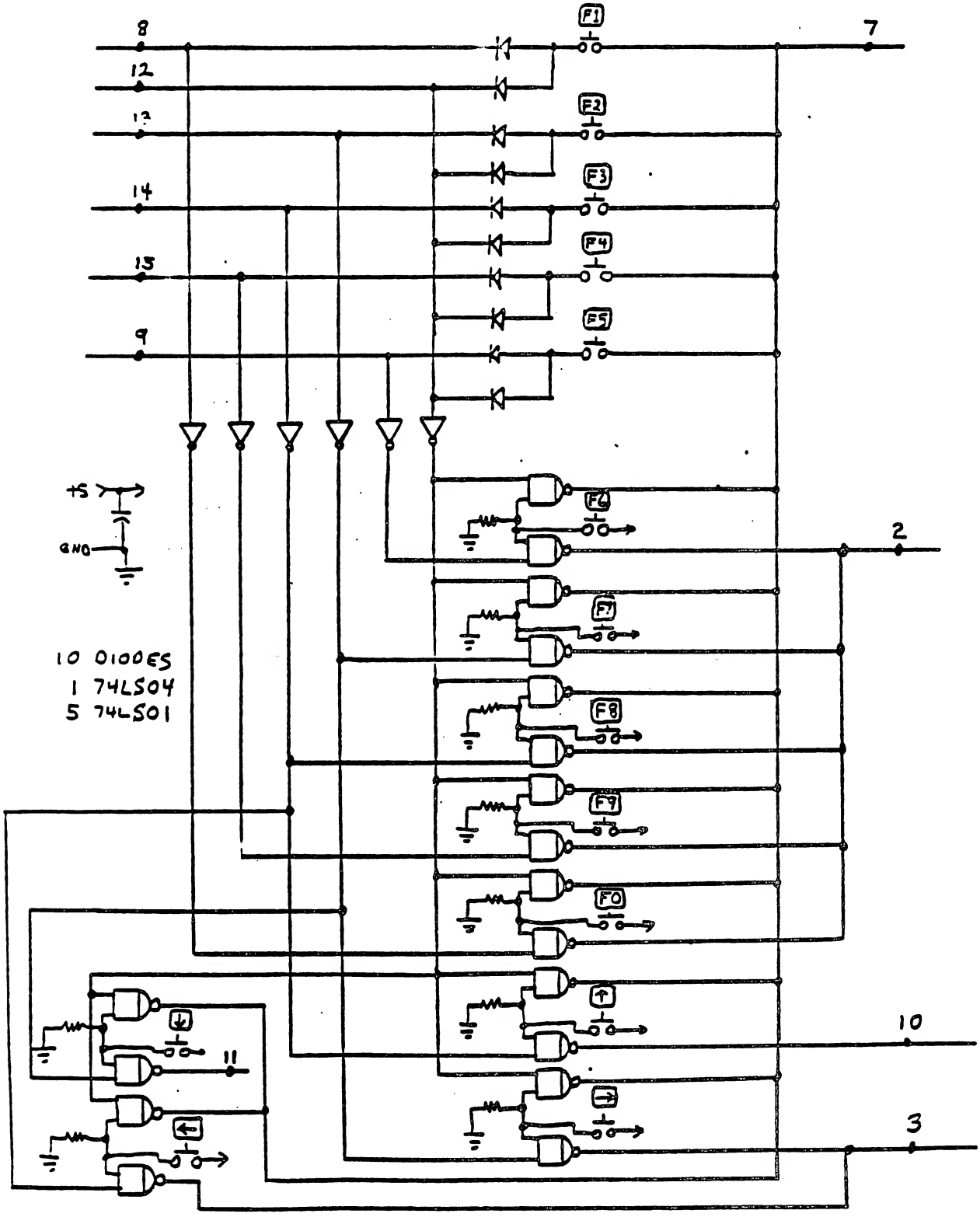

KEYBOARD CONSTRUCTION

Let me start by saying that I am not looking to sell a product but I am selling an idea that I think is generally overlooked and may be one of the best inexpensive additions that you can add to your 99/4A. I say this because I was recently part of a project to make remote keyboards for six of the members of the North Bay 99er's and Jim McLaren of the Sudbury 99er's. Through all reports the scheme was a great success. Why should you be interested in this? Would you like a separate edit pad or calculator style number pad, or both? Would you like a remote keyboard for your 99/4A but at times still like to use the standard keyboard or maybe both for that competitive text game? Would you like all those FCTN "NO." applications to be done with one hand? (Even small hands?) This article can give you the information to build your own for about $35.00 - $45.00 CAN. I would like to point out that this project can be built by one person but where possible it is easier if you draw on the resources of a user group. You can find the members suited to the particular jobs and let them do those parts for the total number the group is making. This will help keep time and cost to a minimum. Now, for the needs of the job. Let me reassure you, they can be found at good prices. It may take time and require a trip to a major city; this is another good reason to do the project as a group. Try the surplus stores first you should be able to find everything you need and save quite a bit.

xxxxxxxxxxxxxxxxxxxxxxxxxxxxxxxxxxxxxxxxxxxx xxxxxxxxxxxxxxxxxxxxxxxxxxxxxxxxxxxxxxxx xxxxxxxxxxxxxxxxxxxxxxxxxxxxxxxxxxxxxxxx

Materials

(2) TI99/4A Replacement Keyboards
(1) Male connector - 15 pin
(1) Female connector - or more
(5') Flexible Cable - 15 wire or more
(10-15) Ft. of small gauge wire
Some 1" pine boards - the length of case
Some 1/8" Matt board or plywood - enough for top & bottom of case
(2) Pieces of about 22 gauge sheet metal - about 6"x 6"
(1) Spray bomb of tough paint
(1) Piece of some type of vinyl

Wood glue, small nails & screws
Solder

Tools

Tin snips
Drill any type
Center punch
Metal file
Hammer
Wood plane
Soldering iron (low wattage)
Screw drivers
Hand saw

OPTIONAL

Table saw
Solder pullit
Square metal nibbler

xxxxxxxxxxxxxxxxxxxxxxxxxxxxxxxxxxxxxxxxxxxx xxxxxxxxxxxxxxxxxxxxxxxxxxxxxxxxxxxxxxxx xxxxxxxxxxxxxxxxxxxxxxxxxxxxxxxxxxxxxxxx

Now that you have read the list of tools and materials, you are probably wondering why some of the sizes are so vague. The lack of particulars is due to case size and shape being a personal preference. So, you now know the type of things that are needed to build the keyboard. Now I will tell you how our group did it. The first thing to do is unsolder and remove the keys from one of the TI keyboards. This should leave you with 47 single keys and a space bar. The PC board and frame are not used. The next thing is one of the most important and difficult, if you get the two frames in figures 1&2 cut and bent you've got it made. The drawings can say much more than if I tried to explain but I will say, cut the holes for the keys carefully before folding. Center punch the pilot holes before drilling and remember: measure twice, cut once. After drilling the holes in the sheet metal carefully cut out the corners with a nibbler or file away the excess. The next step is to snap the loose keys in place as in figure 6. The keys used for the edit pad will have to be remarked but the L,R,U,D, can be used for the main keys.

The "F" and "E" in figure 6 are the FCTN. and ENTER. keys from the second keyboard. You should be left with three pads, the number,edit, and standard TI pads. The case is the next step and how it is made is up to you but I have supplied three drawings, figures,3,4,5 to show how our case was made. I strongly suggest the use of a vinyl covering in a darker color to give a finished washable case. When you mount the key pads in the case, one thing to keep in mind is it is easier to mount the pads to the braces and align them in the case before permanently fastening the braces. The rounded edges on the case were done with a wood plane and the panels top bottom were counter-sunk so that their edges would be hidden. Now, assuming that you are still with me, we will move on to the wiring which is very straight forward. Be sure to remember that your case will be up side down while wiring it and everything will be reversed. It might be a good idea to mark each key on the back side before starting. Using a small gauge wire, and a soldering iron,connect the edit and number pads to the main keyboard as shown in figure 6. Pin 1 should be marked in some way on the the main key board. All 15 wires must be connected to the piece of multi wire cable you have obtained. Be sure to pick a color code and stick to it. You will need it for the other end of the cable, for the connector you will put in the computer side and again when it comes time to join that connector to the mother board. Yes I did say mother board or the main computer board but don't panic this part is not that hard. Open the computer from the bottom and remove everything to start, look closely as you remove things. You will see that the main board doesn't sit up tight to the case. This makes it possible to mount the female connector that matches your cable on the joystick port side,near the back. If you mount the connector carefully it is possible to make it look almost factory. The wires from this connector can be soldered to one of two places: the back of the mother board where the keyboard is plugged in or the PC board on the original keyboard. Remember that color code and use what you know about pin 1 of the key board to find pin 1 on the mother board. Let me make it clear that if you cross up wires it will not hurt anything. This would only be the same as pushing more than one key at a time. If you have the wrong letters when you try the new board you have wires crossed. Well there you have it, put the computer case back together and give it a try. I hope this has been enough to help you have the convenience of a remote keyboard. Before you building this project, make sure that there are not articals on other modifications that could be added to your case that you would like. These could include such thing as, a printer buffer clear copy, load,reset or hold switches or a joystick port. You will probably have to buy a cable with more than 15 wires in it so it is only a matter of getting connectors with more pins to take advantage of those extra wires. By putting a keyboard port in the console you will open up the possibility of any number of specialized key pads for many applications. The port will allow you to do any of the functions that the standard board will do, remotely. It could be used for a music keyboard to go with a synthesizer or a specialized edit pad etc. Thank you for your time and please let me know if you need more help or if you are successful.

Stephen Andrews, 2400 Trout Lake Rd. North Bay, Ontario Canada P1B 7S6

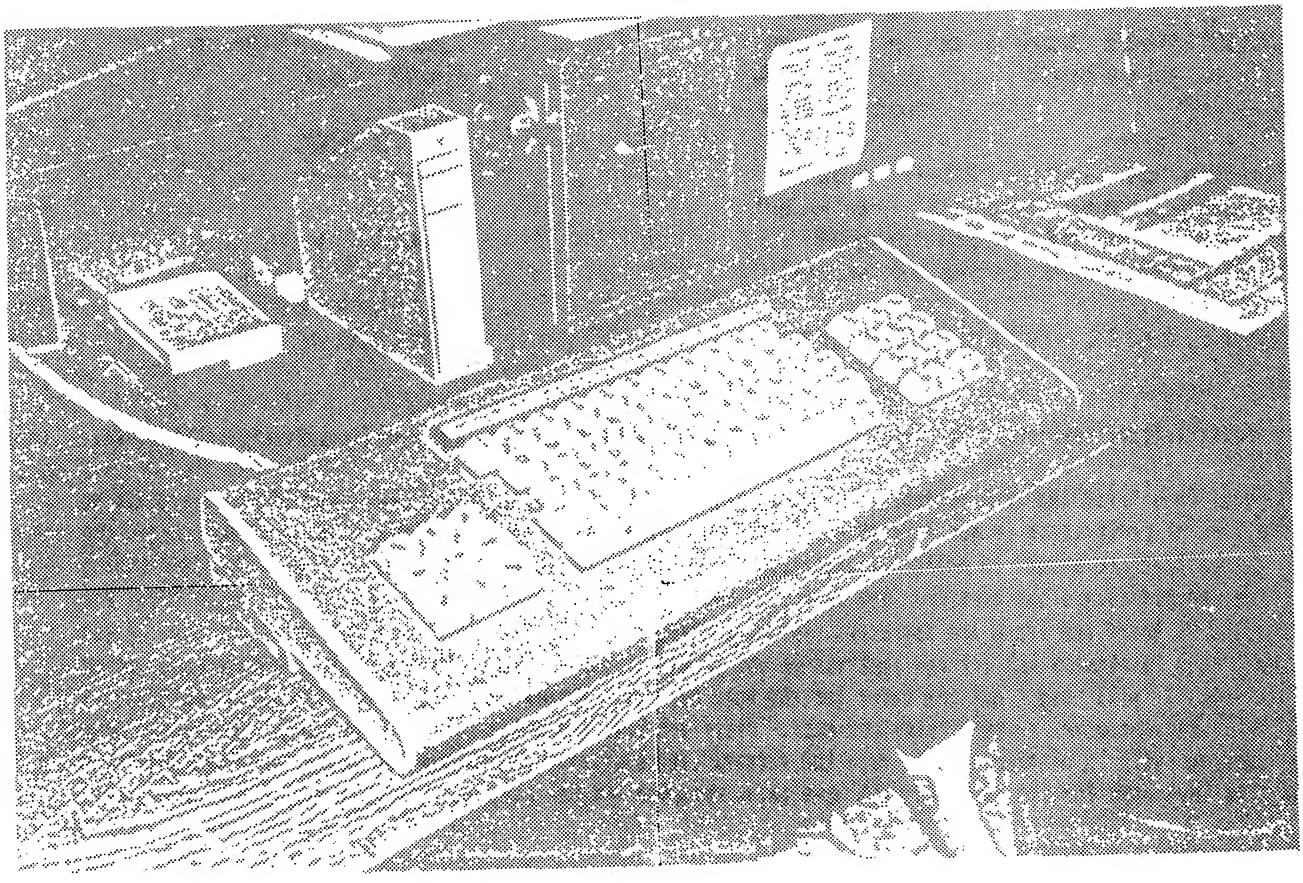

FIG.1

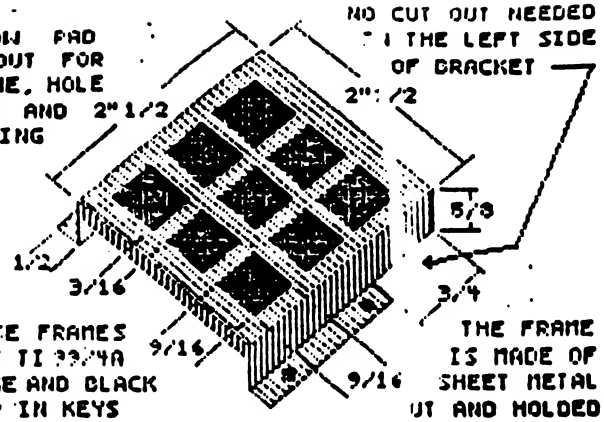

FIG.4

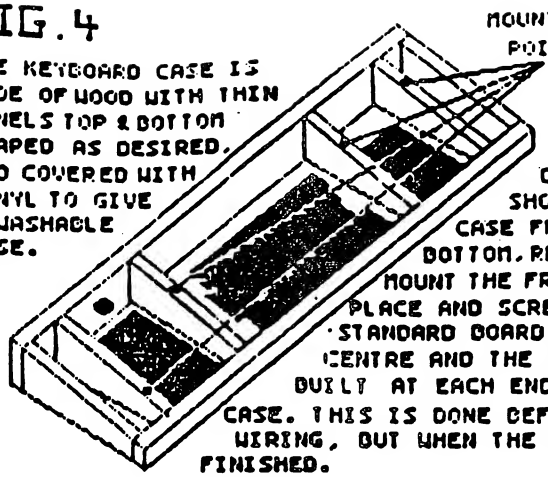

THE KEYBOARD CASE IS MADE OF WOOD WITH THIN PANELS TOP & BOTTOM SHAPED AS DESIRED, AND COVERED WITH VINYL TO GIVE A WASHABLE CASE.

THIS DRAWING SHOWS THE CASE FROM THE BOTTOM, READY TO MOUNT THE FRAMES IN PLACE AND SCREW DOWN. STANDARD BOARD IN THE CENTRE AND THE TWO YOU BUILT AT EACH END OF THE CASE. THIS IS DONE BEFORE THE WIRING, BUT WHEN THE CASE IS FINISHED.

FIG.2

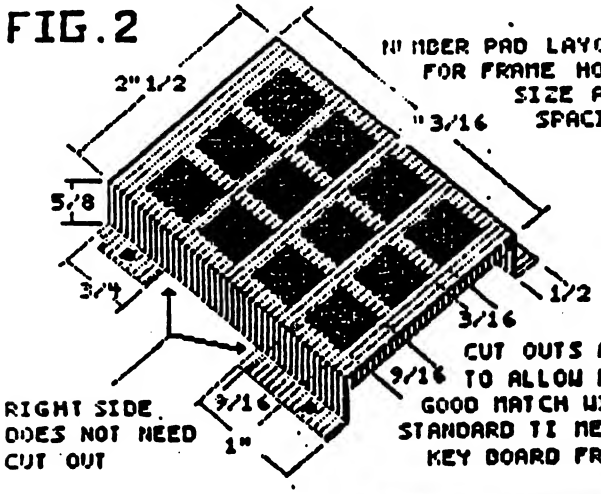

FIG.5 THIS FIGURE SHOWS THE WRAPPING OF THE CASE WITH VINYL BUT BEFORE DOING SO YOU FIRST PAINT THE ENDS OF THE CASE SO THAT WHEN THE VINYL IS PUT ON, IT OVERLAPS THE PAINTED ENDS GIVING A NICE FINISHED CORNER.

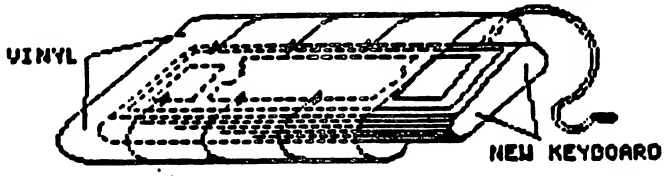

THE VINYL IS PUT ON IN ONE PIECE, LET DRY AND THEN WITH A NEW RAZOR BLADE CUT THROUGH THE COVERING TO LEAVE A CLEAN EDGE AROUND THE KEY OPENING.

FIG.3

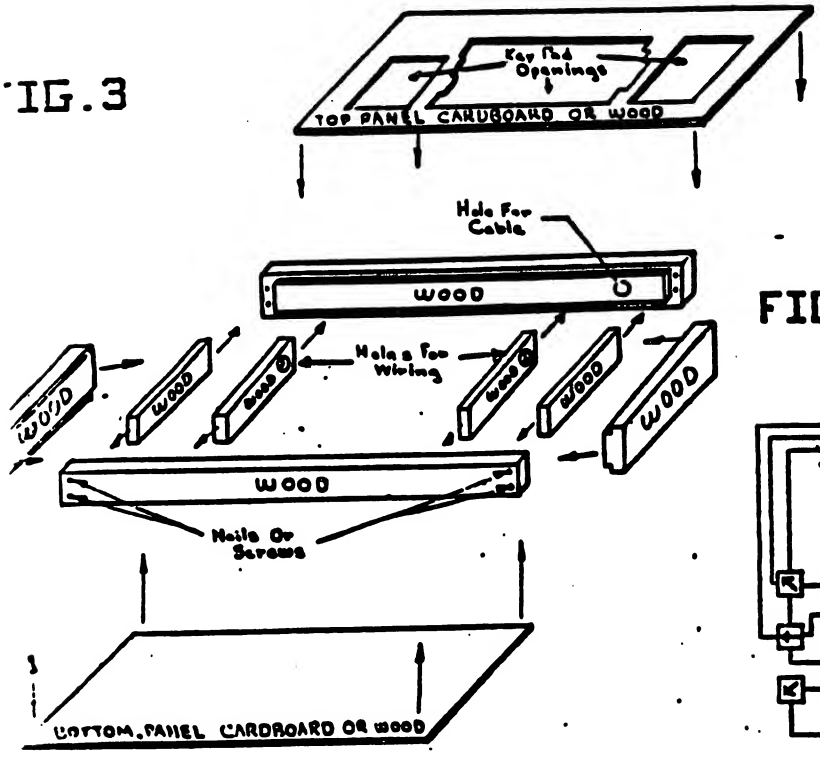

FIG.6

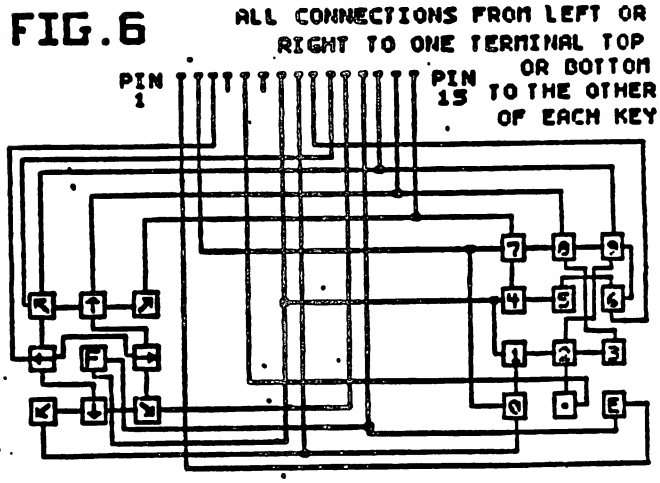

"EXPANDING" YOUR TI
by Kevin Mantooth

Have you ever watched with envious eyes at an IBM user who can put his keyboard on his lap, without second thoughts? Or have you ever watched an owner of another computer idley move his computer around while his types and organizes without worrying about the infamous "lock-up"? Are you jealous of your friends' desk space? Well, if you have had similar thoughts and have yet to do anything about them...then this article is for you! If not...well, this is probably a time waster, so feel free to move on to the next section.

First of all, I'd like to say that this article is meant merely for suggestion and to possibly rouse up some ideas to literally expand your TI-99/4A. I will include some actual procedures, but by no means are these the "official" guidelines or the only possibilities. The intent of this article is to help free you from mind frustrations and to stir up some new interests in your computer.

As I mentioned before, probably the most frustrating characteristics of my TI would have to easily be the lock-ups, the lack of flexibilty, and the space consumed by my system. I have the PEBox myself, so if you happen to have a third party expansion system, you may have fewer or possibly just different problems. I've always found it hard to find a desk big enough to hold all of this equiptment and often found myself shifting my console to the side to make room for papers, disks, etc. Of course, when I shift the console, the dreaded heavy duty "firehose" loosens and 30 seconds later I find myself muttering "unprintables" at the computer. After watching how easily the keyboards are moved around on some of the other computers, I decided to invest a little money and time into making my own lap keyboard.

Theoretically, designing this keyboard is a very simple process. To actually do it takes a little more creativity and possibly some dexterity. The ideal remote keyboard could be built as follows:

1: Take your ambition down to your local Radio Shack or other electronics store and buy a keyboard ($3.30) and some wire or cable.
2: Open the console, unplug the present keyboard.
3: Clip the connector of your new keyboard in half and solder your length wire/cable between the two ends.
4: Plug in the new keyboard
5: Screw everything back together, and you're all set.

Sounds simple enough, right? Well, for me at least, all of the above is only the dream project of simplicity. If you are good with a soldering iron and have good manual dexterity, then you're all set..."I'll meet you at the conclusion", but if you're like me you may find this detailed step-by-step guide more helpful. It is hard to give a direct outline, because I used what I could find at Radio Shack and no other resources. If you shop elsewhere, you may find yourself easily skipping some of my difficulties. So before you cough up any of that hard earned money, read this entire article and consider what

you might do to make it easier or more flexible to your needs. You may find this article extremely detailed, but this was done because I know how uncomfortable many people are with the idea of tampering with their computer. Hopefully, this article will prove to be unnecessarily detailed to make those people feel more at ease.

MATERIALS:

1 Keyboard (try to find one with a connector of 15 wires instead of the ribbon cable) 1 "male" 25 pin serial connectors (try solderless!) 3 "female" 25 pin serial connectors (keep the guy happy!)

1 2' length of ribbon cable (25 conductor) 1 straight serial cable (no crossed wires) 1 worn shoe (preferable a sneaker or slipper)

NOTES:

a) I used 25 pin connectors and just filled one side. Unfortunately, 15 pin connectors are hard to come by, but if you can find them they would be ideal.

b) You could get by with one keyboard, but the connector cables are so short I chose to buy two and "trash" one of them in the end. This basically allows you more wire to work with and if this seems dreadfully wasteful, consider that you would probably pay more for just the connector than you are for this keyboard, and these things make great paper weights!!

PROCEDURE:

1: Collect up all the parts you will be using and find a nice cool, quiet room with a big table and good light.

2: Flip your console over and unscrew the seven screws holding the bottom on. (Look in 4 corners, middle, and front)

3: Remove the bottom cover being careful not to damage the on/off switch and set it way off to the side.

4: Position the console to be face-down with keyboard edge be closest to you.

5: You should now see the bottom of your old keyboard directly in front of you with a long silver box screwed in behind it. You need to remove three screws from the silver box (2 on each side and 1 in the upper middle). When removing the middle screw, be extra careful not to let it slip into the box. You might want to keep some tweezers handy just in case.

6: Carefully lift up the silver box and unplug the keyboard. The connection will be directly between the two. You will have to pull the connector down to disconnect it and may need to use a screwdriver to help with this.

7: Take your NEW keyboard and cut the connector wires in half. If you took my advice and bought two, then cut the wires as close to the keyboard as possible on the first and cut off the connecting plug on the second. The second will be your remote keyboard. The first will be your deluxe paper weight.

8: Connect your remote keyboard wires to a female (holes only) plug. I would recommend putting all the wires to one side if you use a serial connector. If you are using a solderless connector, just press the wire into the clamp and hammer the lid down when all wires are in place. Be sure to also leave yourself some slack to give the last few wires room to stretch.

9: If you "boobed" it up or had some trouble with slipping wires, feel free to yell a few words of frustration and throw the shoe towards the farthest wall.

10: Now take the other half of the connector (the plug side) and connect the wires to a male connector. Mentally connect your keyboard with the plug and make sure all wires line up properly.

11: If you successfully finished this, you're in the home stretch. Go ahead and fetch your shoe while you're in a good mood. CAUTION: If your family is home, DO NOT make eye-to-eye contact! This will save you a lot of explanation about the shoe.

12: Now connect a female connector to one end of the short ribbon cable.

13: Connect the short cable to the end plug-connector.

14: Fetch the bottom cover, and run the open end of the short cable through the ventilation slot closest to the side of the console.

15: Mentally line up your wires and connect the other female connector to the open end. This end should be on the outside of your computer.

16: Plug in your end plug, flatten the ribbon cable, carefully set the silver box into place (look on the under side when trying to line it up), and screw everything back together.

17: If you dropped that little screw into the silver box, remember your faithful shoe...

18: Connect your serial cable between the keyboard and the console and try it out!

You should now have yourself a nice, loyal, remote keyboard fully functional and working hard to keep you happy. You may notice that it seems kind of bare and might tend to fall over on your desk or put little puncturing holes in your legs. Yes, that's right...time for the creativity end of the project. What to mount it in? Well, I don't have all the answers, but you might find a metal box or build your own. Keep in mind that the keyboard needs a slight tilt forward to have level keys. At the moment, mine is mounted on a strip of sloping styrofoam and set into a cigar box until I find something better that would take minimal effort to construct.

I had some very frustrating moments during this project, but hopefully this article will eliminate most of yours. The end result was much worth it in my opinion. Some things to look out for are twisted connections and loose wires. I had trouble getting it all lined up in the end, so if you get no output to your typing, then you have the connection backwards (ie. all wires on right side on keyboard connections on the left in the console). If you get the wrong output (A's instead of 3's) then you have some twisted connections. Try taking off the female connector on the outside of your console and connecting it in other combinations. If most letters show up except a few (possibly in line) then you have a loose wire. When you connect the first connector to the plug inside the console, line it up to be sure the serial connector can go under the box, and design it to have the ribbon cable go underneath the box and backtrack out again. Don't worry, there's plenty of room under there. Other than that, you're on your own!

Having accomplished the design of your personal remote keyboard, you are probably saying, "Ha ha, you confounded console! You have locked-up on me for the last time! Off into the back corners of my desk with you!"

After successfully ignoring the snickers of your family (no eye contact!), you are probably impressed with this new desk space. The next step is to get some disk drive mounting boxes and the appropriate cables for extension and run them out next to your keyboard. Now as long as you have your power switches within reach, you can stack your keyboard on top of the PEBox and put it all up on a shelf, on the floor or wherever along

with your modem, printer or any other peripherals.

So after reading this long article of my long winded ramblings, we have successfully piled the system away to give us a fully functional and practical TI with nothing more than a monitor, disk drive, and small keyboard on the desk. Not too shabby for a few pages of reading! I would like again state that this is only one way to accomplish these results and is obviously by no means the best. This will give you an advantage of hindsight before you even begin, which was my one of my reasons for writing this article. If you are not very apt for technical tasks, I would strongly discourage you from attempting this project on your own and would also encourage you to make sure you understand the basic ideas of everything stated above before starting. If something doesn't make sense, it could be due an error in my organization and I cannot take responsibilty for any damage that may result from a misunderstanding of any sort. I hope this article will encourage you think of similar ideas of your own to share with us. If you have any questions or suggestions (as in a mounting box) please feel free to give me a call before I go back to school in Indiana. Good luck and remember...there is no friend like a loyal shoe....

Kevin Mantooth

(Thanks to Chad Davis for the comfort of knowledge
that this project is possible and has been done!)

zzzzzzzzzzzzzzzzzzzzzzzzzz

through out the BBS and are usually accessed by a ? . A general help file is available in the Newsletter section under the selection "tips and techniques". Please read the files as they contain a lot of valuable and helpful information. Happy transfers! ...Gary Cox -SubSysop

NUMERIC KEYPAD

The one thing missing from the TI-99/A keyboard that would make number crunching a breeze is a 10 key keypad. After several years of trying to "TYPE" numbers the desire of having a 10 keypad became worth the effort of seeing if it could easily be added to my TI by building one myself. The first thing I did was to buy another keyboard, just in case I made any serious mistakes. I didn't and the ease of working on a "SPARE" key-board makes the cost worthwile. You will also need a 10 keypad from any old calculator, as long as you are able to isolate the key contacts so they can be configured to match the coding matrix of the TI-99/A (you probably could purchase a keypad cheaply also). Add to that some ribbon wire (minimum of 8 conductor) and you are ready to begin. On the keyboard (diagram #1) you will see the keyboard matrix. The intersection of the "X" and "Y" axis lines for the numerals and any other keys you want on the remote keypad are identified and (for the numerals) are as follows:

NUM.	1	2	3	4	5	6	7	8	9	0	.
'X'	7	7	7	7	7	2	2	2	2	2	5
'Y'	8	13	14	15	9	9	15	14	13	8	13

Diagram #1

When looking at the bottom of the keyboard, the 15 wire ribbon connector lead (center top) is numbered right to left (IE.

15 14 13 12 10 9 8 7 6 5 4 3 2 1).

Trace the circuit board from the numbered position of the connector lead to a suitable pin to solder the corresponding numbered wire lead that will go to your key pad. Any pin on the board that traces back to the correct pin from the ribbon connector lead will work. If you are adept at soldering in close places, you could even solder our leads directly to the same points that the 15 wire ribbon connector lead is soldered to the board. Just remember to use a SMALL soldering pencil and PRE-TIN the wire to ensure a good solder joing. Any bad solder joints could cause a key to malfunction, so be extra careful in your soldering! Once the keyboard end is soldered, you must develop the matrix for the keypad. This will vary with the type of pad you are using. Just remember to make clean/solid joings when you solder.

If you want to make the pad removeable, there is plenty of room in the TI-99/4A case for a 9 pin 'D' jack on the right side about 2" back from the front edge, or a larger jack could be located elsewhere if required. With the 9 pin I have 1234567890. and "/" on my pad. You just cut the wires one at a time and connect to

the jack and plug of your connector set and the pad is removeable. You may even want to have an ENTER key instead of the "." or "/". If so just hook up the "X" and "Y" wire of the key(s) desired and solder the appropriate wires to your keypad. In any event the installation is quite simply the paralleling of a second set of keys to the keyboard, and both will function normally. You could even go as far as wiring in the entire calculator KEY- BOARD to the TI-99/4A'S keyboard if you desired. If you have any questions on the installation, please call me (H) 901-353-2827 or (W)901-767-2930. It would be possible to do what is now a "multi-key operation" by changing two of the keys in your key pad so that both keys make contact at the same time. This would prevent any back feeding of the matrix signal if you tried to parallel wire two keyboard keys into one of the key pad keys.

David Cotner

SPECIAL NOTE: These modifications are not endorsed or approved by TI and user takes his own risk in making these mofidications. However, it does work as I have seen it in operation... Gary Cox

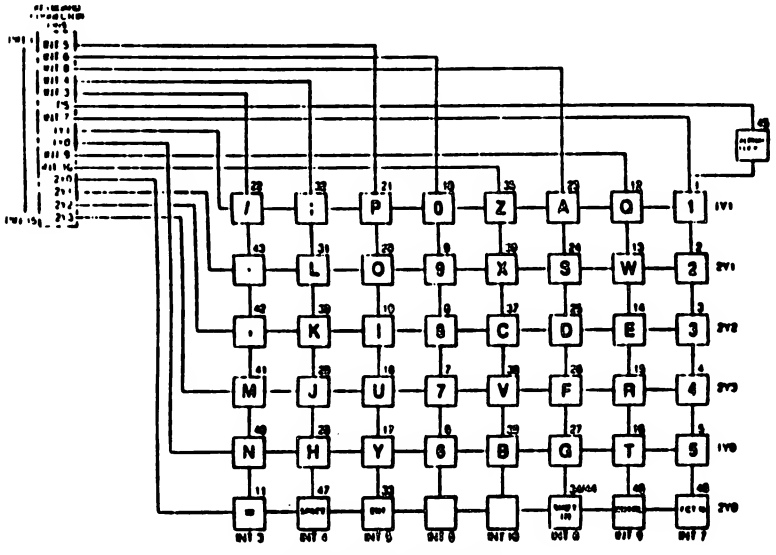

KEYBOARD SCHEMATIC

CORCOMP TRIPLE TECH MODIFICATION PROJECT

by EDWARD A. HALLETT

SOUTHWEST NINETY-NINERS

The CORCOMP TRIPLE TECH CARD comes WITHOUT a LED on the front of the card like the other cards for the TI EXPANSION BOX. This project consists of TWO DIFFERENT modifications. The first installs a LED that will light whenever the "CLOCK" portion of the card is accessed. The second installs a TRI-COLOR LED instead that will light one color whenever the "CLOCK" portion of the card is accessed and will light a second color whenever there is DATA in the "BUFFER" portion of the card.

::

CAUTION: THIS MODIFICATION IS SOLEY UNDERTAKEN AT YOUR OWN RISK AND MAY VOID YOUR CORCOMP WARRANTY.

::

The first modification is quite simple as CORCOMP made provisions for a LED on the TRIPLE-TECH card but never utilized it. On the very early versions of the card a LED was installed but was disabled. This was because the LED was apparently mounted in the wrong location on the card and would not line up with the PLEXIGLASS WINDOW of the TI EXPANSION box. The LED was therefore disabled by burning it out. To restore its operation install a new LED in place of the old one and bend its leads so that the LED lines up with the PLEXIGLASS WINDOW. On later versions of the card NO LED has been installed but the provisions for one are still there.

1. Install a 100 OHM RESISTOR in the location marked "R1" at the BOTTOM LEFT CORNER of the card. (With the components UP - edge connecter at the bottom)

2. Install a LED in the position marked "LED" next to U6. CATHODE end (flat side or short lead) in the lower hole.

NOTE: For proper alignment with the PLEXIGLASS WINDOW the LED should be positioned in line with U6 with the base of the LED butted up against the end of U6. Do not short any pins!

This LED will light momentarily whenever the "CLOCK" portion of the card is accessed.

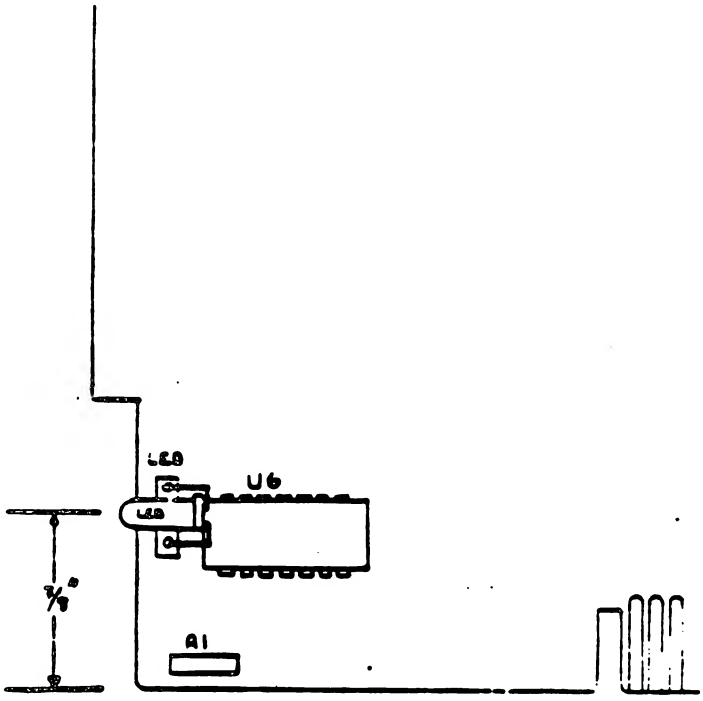

The second (ALTERNATE) modification adds a TRI-COLOR LED that lights one color when the "CLOCK" portion of the card is accessed and lights a second color when there is DATA in the "BUFFER" portion of the card.

1. Install a 100 OHM RESISTOR at the location marked "R1" at the BOTTOM LEFT CORNER of the card

2. Install a NAND GATE (74LS00) PIGGYBACKED on top of U8. Connect PINS 7 AND 14 to the CORRESPONDING pins below. BEND PINS 1 THRU 6 and PINS 8 THRU 13 outward.

3. Install a TRI-COLOR LED (RADIO SHACK # 276-035) at the location marked "LED" next to U6 by connecting

ONE LEAD to the LOWER CONNECTION POINT and connecting the OTHER LEAD to PIN 11 of the new NAND GATE.

4. Install a 2.7 K OHM RESISTOR between PIN 12 and PIN 7 of the new NAND GATE.

5. Install a 2.7 K OHM RESISTOR between PIN 13 and PIN 14 of the new NAND GATE.

6. Install a 1N34A DIODE, connecting the CATHODE (BANDED END) to PIN 12 of the new NAND GATE.

7. Connect a 7 INCH LONG JUMPER WIRE from the DIODE'S ANODE LEAD to the SOLDER PAD directly above the LETTERS "U25" at the RIGHT HAND SIDE of the card.

NOTE: THIS SOLDER PAD IS CONNECTED TO THE BUSY LINE TO THE PRINTER.

PINS 1 THRU 6 and PIN'S 8 THRU 10 of the ADDED NAND GATE are not used and are left NOT connected.

This LED will momentarily light one color whenever the "CLOCK" portion of the card is accessed and will light a second color whenever there is DATA in the "BUFFER" portion of the card or flash the second color as DATA passes thru the "BUFFER" to the printer. This completes the TRI-COLOR LED modification.

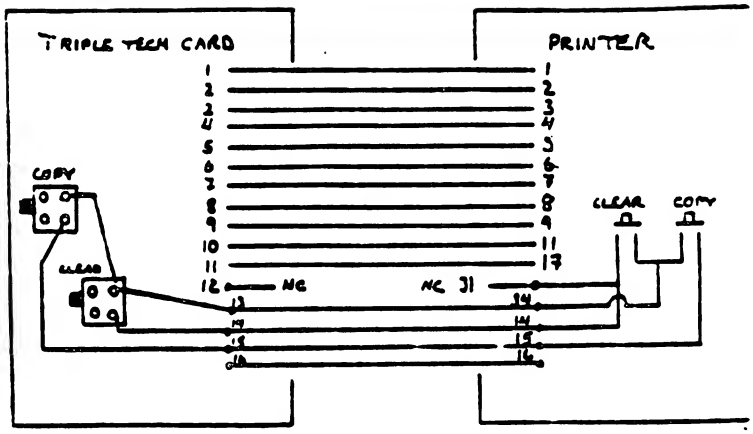

For those who wish to have REMOTE "COPY" and "CLEAR" buttons for the TRIPLE TECH here is a new approach. Pins 13, 14, and 15 of the printer jack of the TRIPLE TECH card are not used by the card. By connecting these three pins to the "COPY" and "CLEAR" switches on the card the REMOTE switches can be mounted on the PRINTER ITSELF! Pick up these three lines thru three UNUSED pins on your printer's PIO jack and run them to two REMOTE switches you install on the printer. (PINS 14, 15, 34, 35, and 36 are UNUSED on STAR MICRONICS SG10 printers) Check your manual!

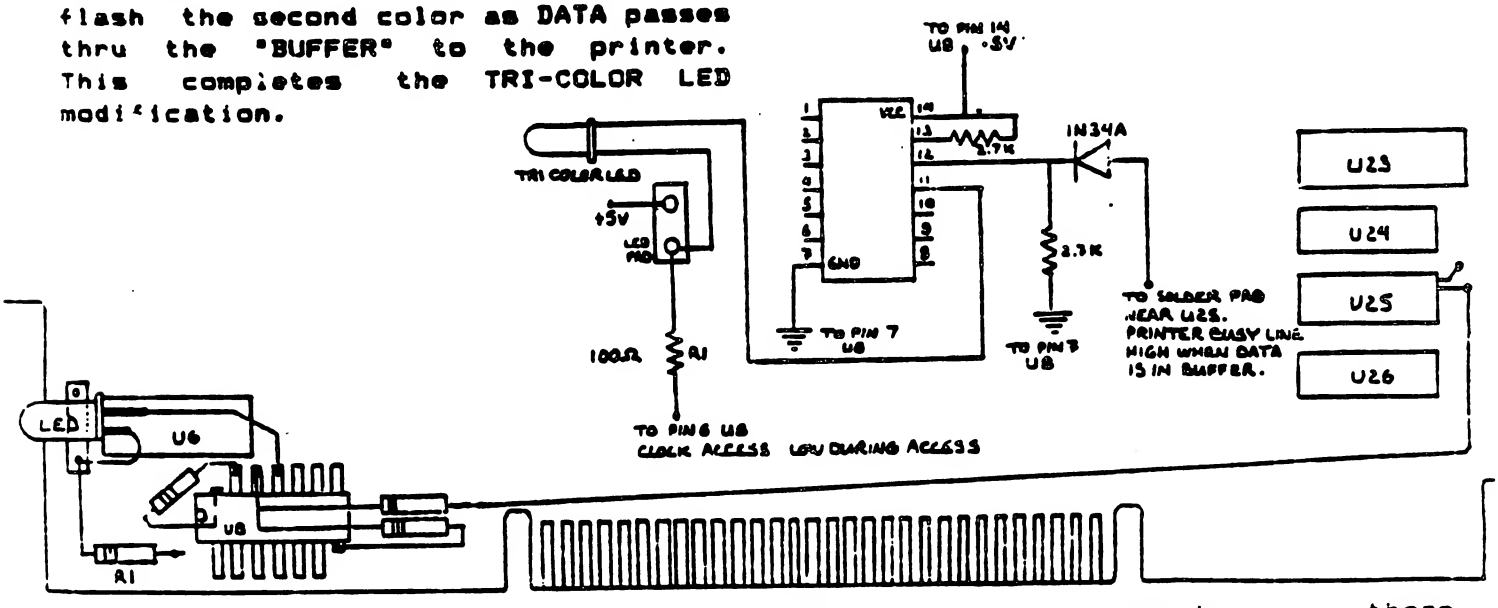

THE DIODE AND RESISTOR MAY BE MOUNTED ON TOP OF U8

Questions concerning these modifications should be sent to: SOUTHWEST OHIO P.O. BOX 17831.

POOR PERSON'S AB SWITCH

Several people have told me they would like to construct their own AB switches. This article may be the answer.

An AB switch simply switches something from position A to position B. It doesn't get any simpler than that. Away back in BC they were called transfer switches. NOTE: (BC= Before Computers)

Most computer AB switches are designed to enable you to use two computers with one printer or one computer with two printers, without unplugging and re-connecting them every time you change. They are available with either Sub-D serial or with Centronics parallel connectors. One problem with the commercial units is that they have all female connectors so you still have to purchase or assemble, at least, two expensive cables. Another problem, for people like me, is that they normally sell for some figure between $95.00 and $45.00. If you just buy the switch and two "PIO" cables you could pay up to $150.00 but, to be fair, there are places that sell the AB switch for $22.50 and the cables for $12.00 each, plus tax and shipping. ABC switches are also available, if you need them.

If you need to switch two computers to a single printer you will do well to buy a factory assembled unit. No home computer or printer uses all 36 connections but different computers and different printers use different pins so all 36 pins are switched to avoid any mixup. If you switch all pins you must use a 36 circuit two position switch or equal. Of course, by doing a little research and custom building a unit that may work only with your setup you can get by for quite a bit less but the components will usually cost considerably more than one of the lowest priced commercial units.

ONE COMPUTER to TWO PRINTERS

If you need to switch one computer to two printers the story is entirely different. ANOTHER TI-99/4A ADVANTAGE is that, if you are using one TI computer and any number of parallel printers they can be switched with a two pole switch! The reason is that the TI only uses the BUSY signal, from the printer, as its Handshake IN. It does not need an ACK signal. The strobe line, the eight data lines and the ground do not need to be switched, they can be wired in parallel. We must switch the BUSY signal line and we cannot mix the +5V pull in signals so, if either of your printers need the pull-up voltage, we must switch that line too. All it takes, for AB switching, is a DPDT switch!

If all parts are purchased, new and you use your present printer cable to come from the RS-232 connector, you

should be able to build this set-up for under $20.00, including the cables to both printers and everything can be obtained at Radio Shack. If you have ever built any other electronic devices you will probably have some of the "stuff" so you will not have to buy all of the parts that are listed.

CONSTRUCTION

Start by obtaining all of your components. There is nothing worse than cutting a case to fit parts that are different from the ones you cut and drilled for. Do your layout with a grease pencil or sharp crayon. Center punch all holes then drill all holes with the 3/16" bit, first. The switch hole should be in the center of the front. The screw holes are evenly spaced across the bottom but they should be positioned so your terminal strips will be located to the rear, to allow sufficient room for the switch. The three holes for the cables should be evenly spaced across the back. See Figure 2. The only dimensions shown are the hole sizes for the screws and grpmmets. Exact dimensions are not given because your components will probably be different from the ones I used.

When the holes are drilled, insert the grommets and mount the terminal strips. Mount the switch, turned across the case, not up and down. See Figure 1. NOTE: Do not attempt to wire by Figure 1. It is a pictoral that is only intended to show positioning of the components.

The schematic is shown in Figure 3. It should be readable but the connections are also listed here so you can double check them.

CONNECTIONS

TI OUT:

TI pin		Switch box term
1	to	1
2	to	2
3	to	3
4	to	4
5	to	5
6	to	6
7	to	7
8	to	8
9	to	9
10	to	Center of switch pole 1
11	to	16 (ground)
12	to	Center of switch pole 2
13	to	Not used
14	to	Not used
15	to	Not used
16	to	16 (ground)

A & B CENTRONICS PLUGS IN:

Switch Box term		Centronics
1	to	1A & 1B
2	to	2A & 2B
3	to	3A & 3B
4	to	4A & 4B
5	to	5A & 5B
6	to	6A & 6B
7	to	7A & 7B
8	to	8A & 8B
9	to	9A & 9B
A side SW pole 1	to	11A
B side SW pole 1	to	11B
A side SW pole 2	to	13A
B side SW pole 2	to	13B
11	to	Not used
12	to	Not used
13	to	Not used
14	to	Not used
15	to	Not used
16	to	16A & 16B & 17A & 17B

Centronics pins 18 through 36 are not used with ribbon cable. If round cable is used the pairs from 1 to 9 are connected to pins 19 through 28 and all floating pins are grounded.

NOTE: A FEW PRINTERS HAVE SOME NON-STANDARD CONNECTIONS. IF YOU HAVE ONE OF THESE PRINTERS, CHECK THE CONNECTIONS IN YOUR WORKING CENTRONICS CONNECTOR OR REFER TO THAT PRINTER'S MANUAL FOR PROPER CONNECTIONS.

PARTS:

Input cable: You can use your present cable and save the cost of the ribbon and two connectors. If you wish to keep your cable, I have several 16 PIN IDC Dual Inline Header Connectors with 0.1" spacing. (This is the small connector that comes from the RS-232 card.) The ones I have use the highest quality contacts (phosphor bronze, flashed with nickel, then totally gold plated). I also have some 38 conductor ribbon cable that can easily be ripped down to two 16 conductor cable with a 6 conductor cable left over. The connectors are $1.50 ea or 5 for $6.00. The cable is 20 cents per foot. Call or write:

Dallas Phillips
Rt4 Box310 MtOlivet Rd.
LaGrange, KY 40031
(502) 845-7567

The rest of the parts can be obtained from Radio Shack. NOTE: Several switches are listed. Select only one. I chose the one I used because of appearance.

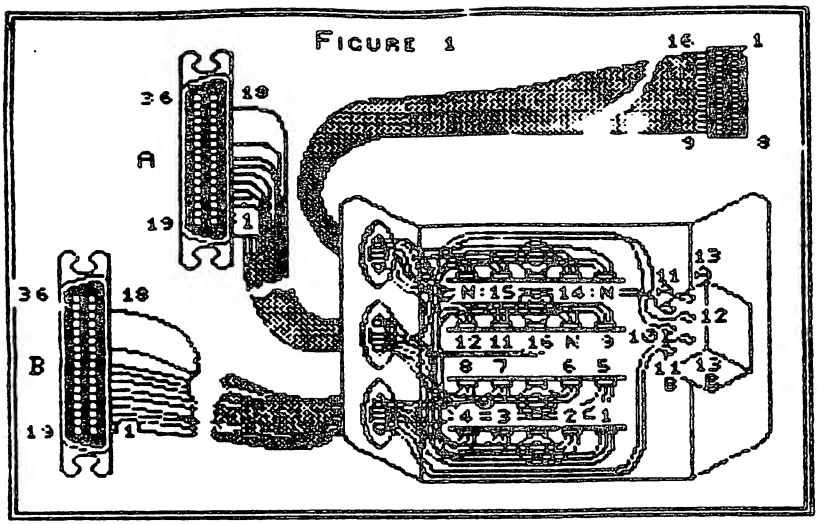

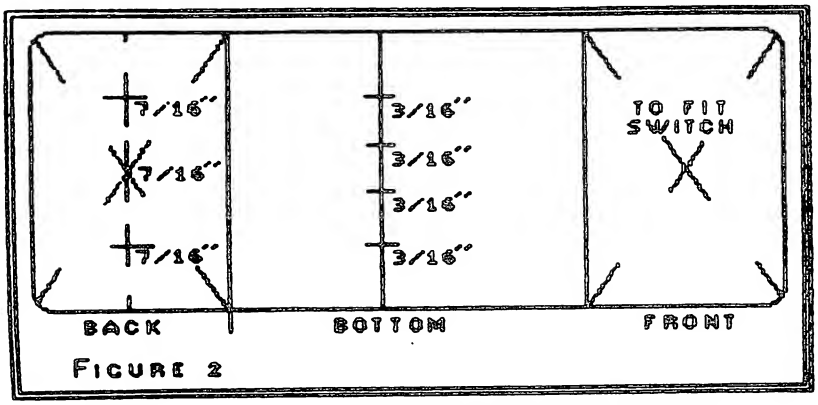

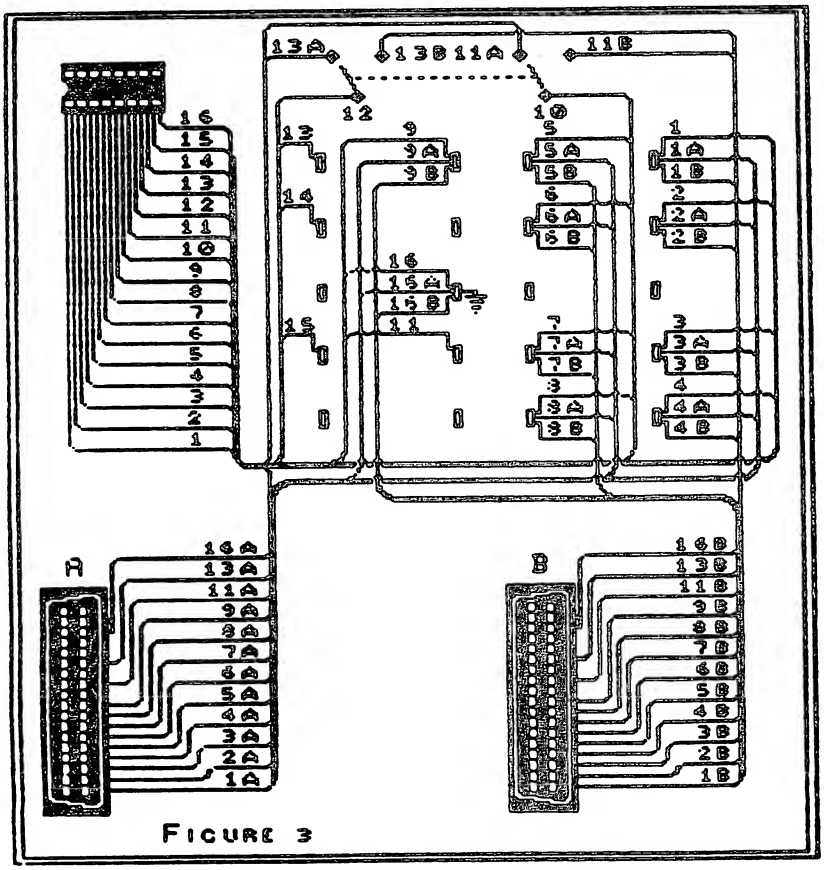

Cabinet; Steel and Aluminum, 2 1/8"x3 1/4"x4". Cat #270-251 $2.99

Centronics Parallel Connectr Male, w/solder connections. (Need 2 unless you use your cable.) Cat #276-1534 $4.99

Switch; DPDT Cat #275-663 $3.19 (I used this one.)

Switch; DPDT Cat #275-636 $2.99

Switch; DPDT Cat #275-1546 $2.79

Switch; DPDT Cat #275-614 $2.39

Switch; DPDT Cat #275-625 $1.99

Terminal Strips; Phenolic Cat #274-688 4/89c

Grommets; Pack of 35 asst Cat #64-3025 99c

Machine screws; 6-32 Pack of 42, asst lengths Cat #64-3010 99c

Nuts; 6-32, Pack of 30 Cat #64-3019 99c

You probably have the nuts, bolts, grommets, etc. and possibly the switch and terminal strips. If you wish to use a larger cabinet and mount plugs in it that is easily done. Many printers have room for the terminal strips and switch inside the case, if miniature ture units are used. If you do this, be certain that no mechanical interference can occur and put the new wiring away from the printer's printed circuit board so electrical interference cannot occur either.

I have been using this switch for more than a year. It works perfectly, every time. It is a little tedious to build but it does a great job, for very little money.

BY: BRIAN McFEETERS PEKIN USERS GROUP

HOMEMADE PRINTER STAND

Recently, I purchased a second printer for my daughter. I wanted to set her printer on a stand with the paper underneath. However, I could not find anything locally that would serve the purpose as a printer stand so I decided to make my own.

I concluded I could make a custom stand out of PVC (plastic) water pipe. I used 1/2" diameter pipe, but I'm sure you could 3/4" diameter without any problems. To make one like in the sketches, below you need about 4 of 5 five feet of pipe, eight 90 degree fittings and two tees.. You might get by without glueing the joints, but I wouldn't recommend it. So you should plan on buying some PVC pipe cement. If you have to buy all of the needed material, it will cost between seven and ten dollars.

The first step is turn your printer over and see what length and width stand fits best. Next determine the height you want. Finally, cut pieces to build the stand remembering that the pieces fit in the fttings, so measure accordingly.

Looking at the top view shows the printer will sit on a frame that looks like a flattened I. The front view shows the stand sits on the desk with two runners. Remember to assemble the stand first without glueing the joints to check how it fits.

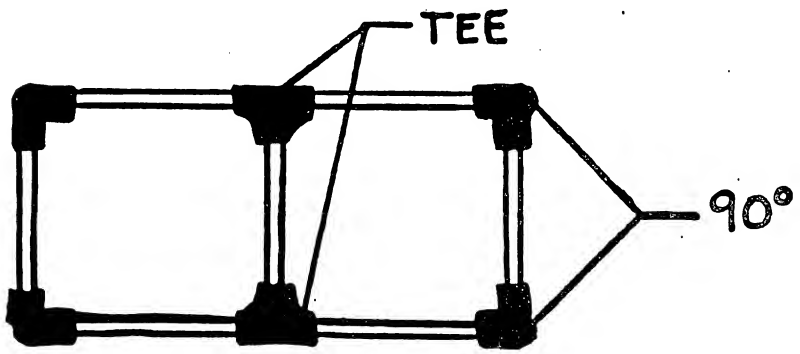

TOP VIEW

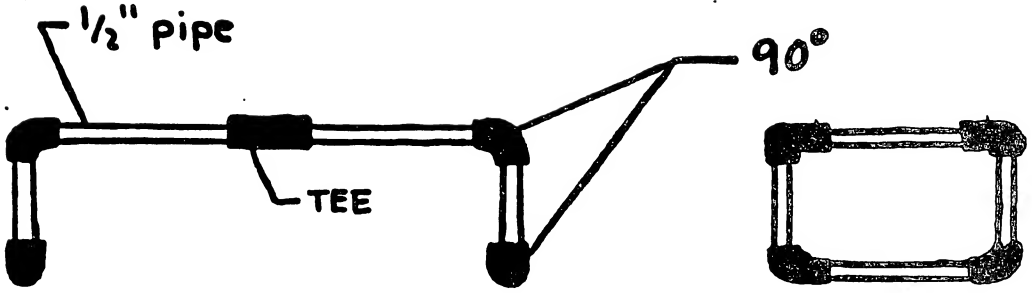

FRONT VIEW

SIDE VIEW

Computer Center
by Jim Mekeel
NorthCoast 99er's

This month, I thought that I would share with you some plans I found at a lumberyard for a computer work center that you can make from a single sheet of plywood. Of course, you can modify the plans to suit your own needs. The center has a seat for two people and uses an easily assembled slot-together design that just as easily permits dismantling for storage or transport. (Plans by American Plywood Association)

Recommended panels: APA trademarked Medium Density Overlay (MDO), overlaid both sides, if available, or
APA trademarked A-B or A-C, or
For unique appearance, an APA trademarked reconstituted wood panel

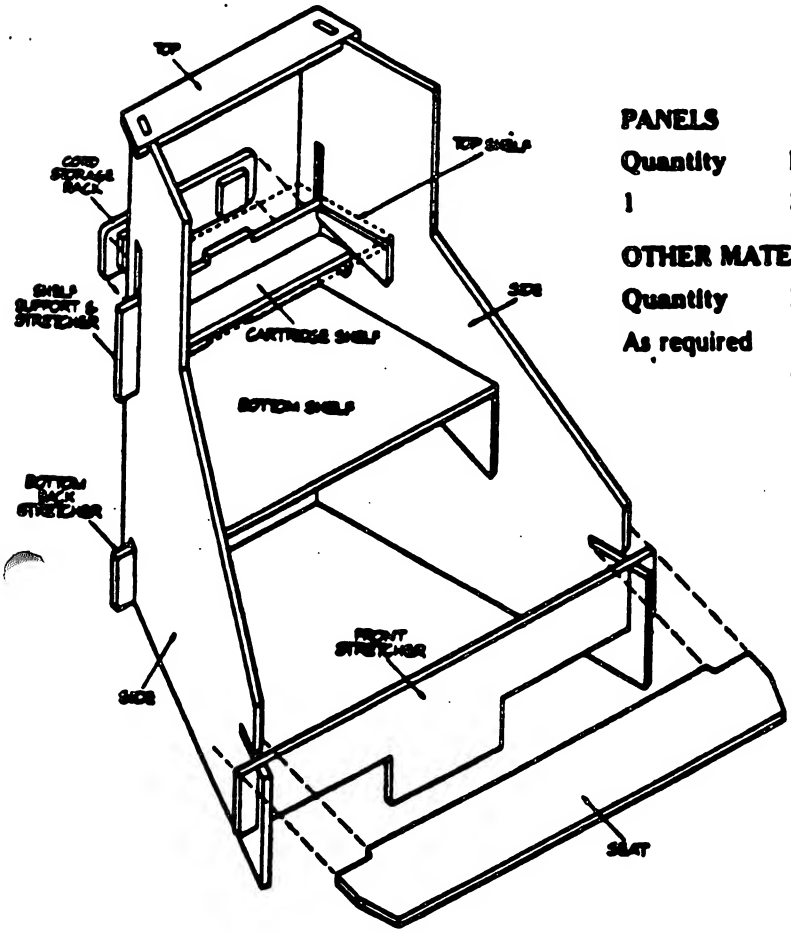

PANELS

Quantity	Description
1	3/4 in. x 4 ft. x 8 ft.

OTHER MATERIALS

Quantity	Description
As required	Finishing nails and white or urea resin glue, (for shelves and cord storage rack), wood dough or synthetic filler, fine sandpaper, top quality finish (see finishing section)

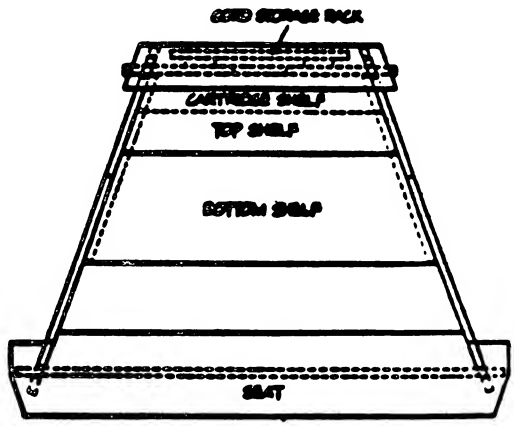

Top View

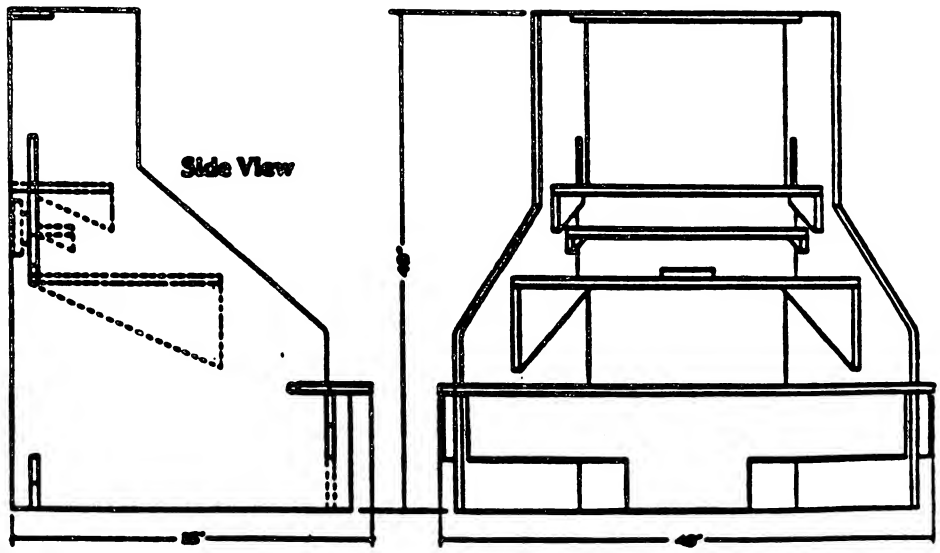

Panel Layout

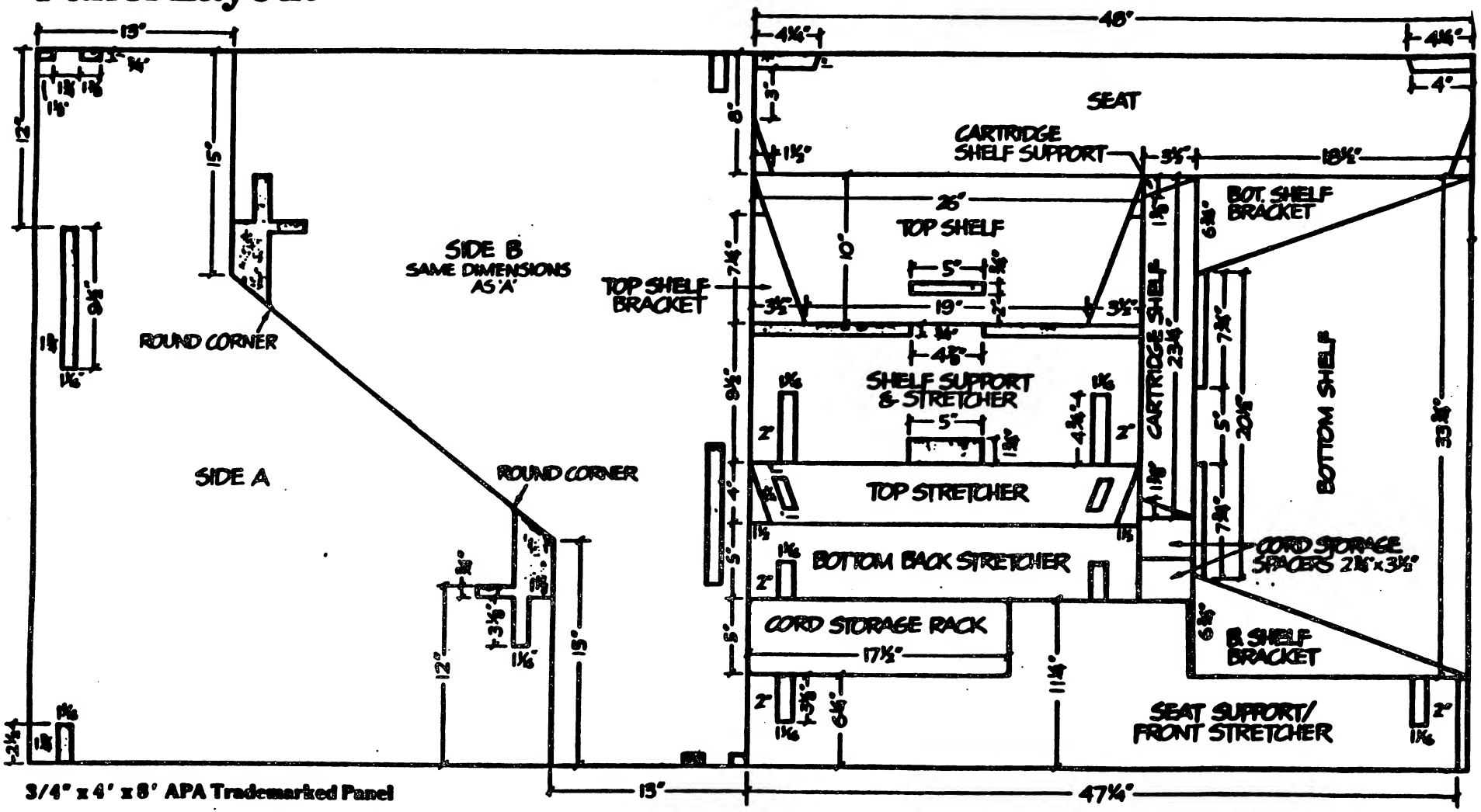

3/4" x 4' x 8' APA Trademarked Panel

SERIAL TO PARALLEL

BY WILLARD CHANEY

Several months ago I saw an advertisement in the TRADIN' TIMES for a full blown system, The price was dirt cheap so I called the number listed to find out if this was not a come on. The parent of the son that owned this equipment answered the phone and knew as much about computers as smokey the bear, so I had to call back later when she expected her son to be home. I called at exactly the time she instructed me to, and low and behold the ad was not a fluke. There was a full blown system for that price and he would include all the software for the same price. I hopped in my car and drove to their home hoping to arrive before anyone else would call and offer them more because it was obvious that they were not aware of the market value of TI computers.

I requested a test on all portions of the system and much to my chagrin each and every component worked and there was all sorts of software games that filled two shopping bags. I could not wait to get home and set this system up and start using it to print the Newsletter.

The system performed well except the TI 99/4 impact printer which was so slow and the fact that I double strike every character so the character will be easily read in the Newsletter made it that much slower. I asked various people in the club if this is the way it is and if there was any thing I could do to speed things up. I found out that if I switched my printer from serial to parallel it would print much faster. I saw ROY HUNTER at one of our regular meeting and ordered a parallel cable for my printer, and that is where my trouble began. The problem I experienced after switching to parallel port from serial port was after the printer was on for a while (the time varied depending on use) it would print every other language but English. To get around this problem, I would turn it on only when I wanted to print something, and turn it off when printing was complete.

Thanks to ED who happened to read an article in HOME COMPUTER JOURNAL that addressed this problem I was able to solve my dilemma. I will tell you step by step.

If you switch from serial to parallel port printing on the TI printer (EPSON-MX 80) you must remove the serial card from within the printer.

The platen handle pulls out and off,and four screws must by removed from the bottom cover,before removing the cover there is a plug on the right hand inside top cover that must by unpluged. After unpluging this plug now you can remove the cover and the serial board is the one in the center at the rear on the printer. There are four screws that hold this board in place remove them and there is a ground wire that plugs into this board also that you must unplug. The ground wire should by placed in the printer so when you replace the top cover it will not be damaged. Now you can remove the serial board and replace the screws in the holes where you took them in case you want to go back to serial port. The card should be stored in a protected blanket and a safe place for future use aslo. Replace the top cover and the

1. Turn the power off before you attempt to open the printer case.

CAUTION

The electronic components in the TI-99/4 Printer can be damaged by static electricity discharges. To avoid damage, make sure you discharge any static electricity from your hands and avoid touching components on the circuit boards other than the DIP switches.

2. Remove the manual paper-feed knob (the black knob on the right side of the printer) by pulling it straight out, with firm but steady pressure.

Remove manual paper feed knob

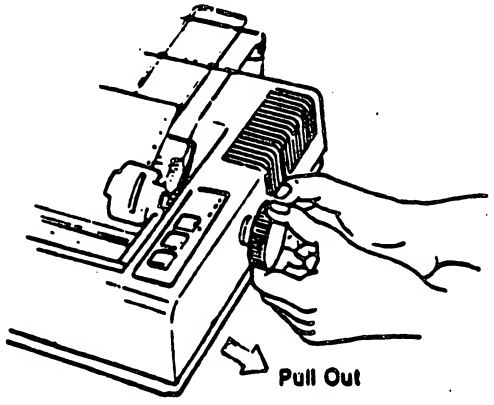

3. Turn the printer upside down on a soft surface. With a Phillips-type screwdriver, completely loosen all four screws. Place tape over the four holes so the screws do not fall out when you turn the printer right side up.

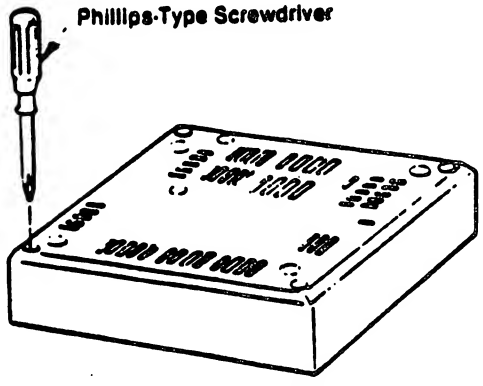

Loosening All 4 Screws

4. Turn the printer right side up again. Gently loosen the upper case. Lift up the cover from the left side and pull out the wires that are connected to the control panel on the front right corner.

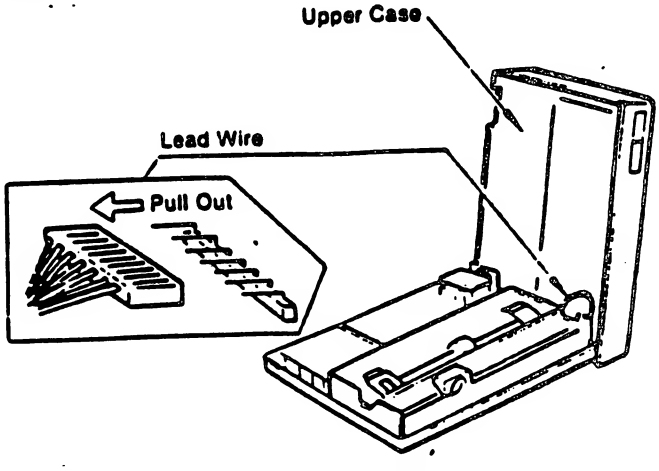

Pull out wires hooked to control panel.

four screws that hold it in place. Align the handle with the flat spot on the shaft and push it in place.

That is all there is to changing your printer from serial to parallel port, if you have any question please feel free to give me a call. I have drawn a diagram for those of you that are visual.

SERIAL TO PARALLEL

BY WILLARD CHANEY

TI-99/4 Printer

Underneath the serial interface board is the circuit control board.

1. Remove the four screws at the four corners of the serial interface board.
2. Disconnect the frame ground wire from the serial interface board.

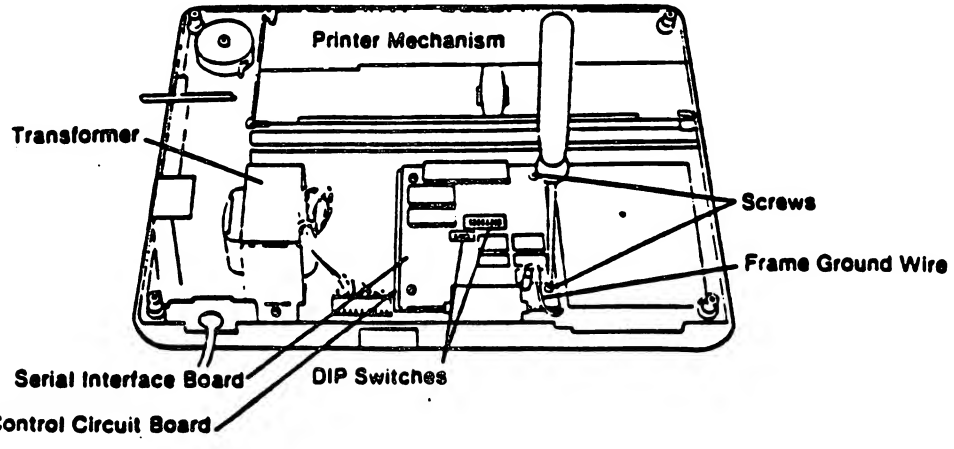

Removing Serial Interface Board

3. Gently lift the serial interface board up. The left side requires additional pressure because there is a multi-pin connector between the serial interface board and the circuit control board underneath.

WIRING A PRINTER
BY DENNIS PORPORA

Before I bought my printer I picked up a cable and plugs. I figured it was easy to do, well, the RS232 interface card was in German, the printer called pin 1 Not Strobe and the RS232 card called it Handshake Out. Well, I asked someone with the same printer as mine if I could look at his factory made cable and it worked for me.

Here is how to wire a RS232 card to a Gemini 10X printer. If you have any other printer just wire your cable by signal name and not by pin number. It should work for all parallel printer

16 PIN PARALLEL CONNECTOR		36 PIM AMPHENOL CONNECTOR	
PIN NUMBER	SIGNAL NAME	PIN NUMBER	SIGNAL NAME
1	HANDSHAKE OUT	1	NOT STROBE
2	DATA,LSB	2	DATA,LSB
3	DATA	3	DATA
4	DATA	4	DATA
5	DATA	5	DATA
6	DATA	6	DATA
7	DATA	7	DATA
8	DATA	8	DATA
9	DATA,MSB	8	DATA,MSB
10	HANDSHAKE IN	11	BUSY
11	NOT USED	10	NOT USED
12	NOT USED	12	NOT USED
13	NOT USED	13	NOT USED
14	NOT USED	14	NOT USED
15	NOT USED	15	NOT USED
16	LOGIC GROUND	16	SIGNAL GROUND
16	LOGIC GROUND	19	RETURN SIGNALS PIN 1-12
16	LOGIC GROUND	20	RETURN SIGNALS PIN 1-12
16	LOGIC GROUND	21	RETURN SIGNALS PIN 1-12
16	LOGIC GROUND	22	RETURN SIGNALS PIN 1-12
16	LOGIC GROUND	23	RETURN SIGNALS PIN 1-12
16	LOGIC GROUND	24	RETURN SIGNALS PIN 1-12
16	LOGIC GROUND	25	RETURN SIGNALS PIN 1-12
16	LOGIC GROUND	26	RETURN SIGNALS PIN 1-12
16	LOGIC GROUND	27	RETURN SIGNALS PIN 1-12
16	LOGIC GROUND	28	RETURN SIGNALS PIN 1-12
16	LOGIC GROUND	29	RETURN SIGNALS PIN 1-12
16	LOGIC GROUND	30	RETURN SIGNALS PIN 1-12
		17	NOT USED
		18	NOT USED
		31	NOT USED
		32	NOT USED
		33	NOT USED
		34	NOT USED
		35	NOT USED
		36	NOT USED

I hope that this may help someone.

Here is a nifty project for the experimenter. Do you have a lot of software that is configured for RS232 yet you have a parallel printer? Well, this little gizmo will output on the serial port making the computer think it is talking to the RS232 and then on this external circuit all the data is converted to parallel for the parallel printer requirements. This circuit produces a CENTRONICS compatible interface. Good Luck.

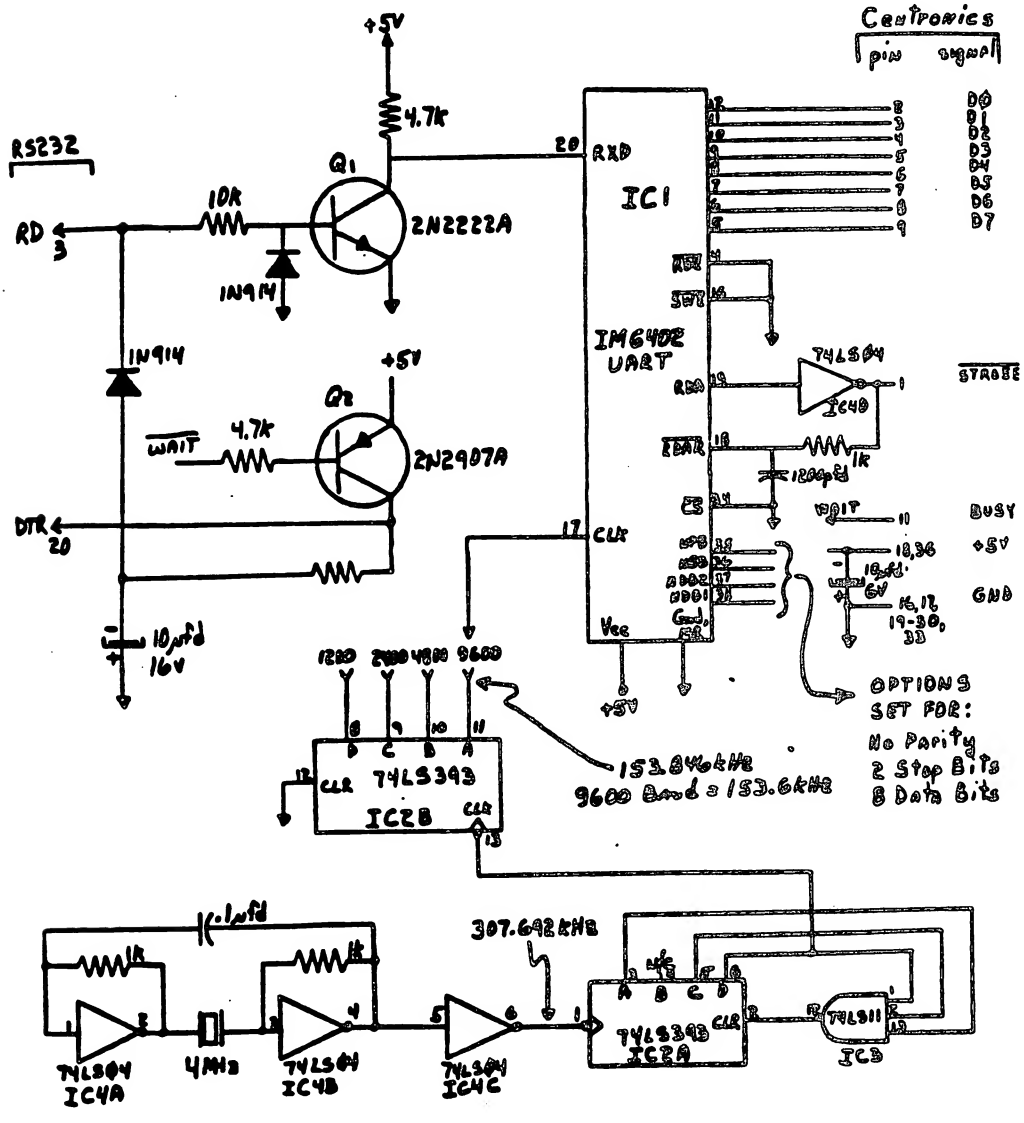

SERIAL DATA TRANSMISSION

Jim Mokesl
Northcoast 99ers
Cleveland, Ohio

In serial transmission, information is transferred, on data bit at a time, between two computers. this flow of data can be one of three modes:

SIMPLEX - data flows in only one direction.

HALF DUPLEX - data flow is in both directions but not simultaneously.

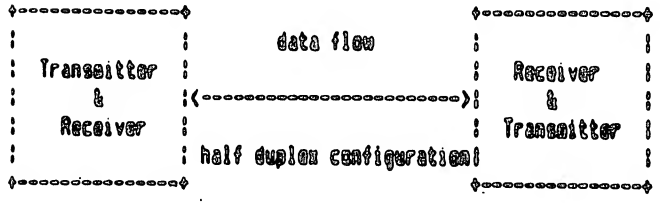

FULL DUPLEX - data flow is in both directions and can occur simultaneously.

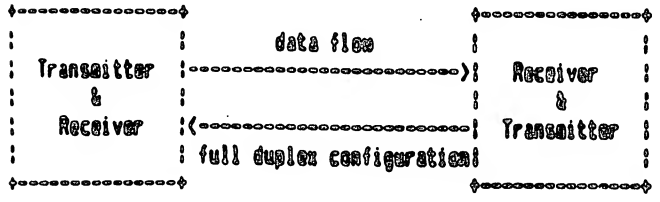

Data transmission can occur either synchronously or asynchronously. With synchronous transmission, faster speeds can be achieved because the two machines can be synchronized by special characters that do not consume space in each transmitted byte. However, the TI 99 computer and most other computers transmit data asynchronously so that there is no compatibility problems between different machines (TI can talk with Apple, IBM, et cetera). Within the asynchronous data stream, each character of data is transported in a binary bit frame. Each frame begins with a start bit. A low level voltage signal on the data line marks the beginning of the start bit, and the receiving computer can then begin looking for the character transmitted. The following 7 or 8 data bits comprise the binary character. (This should be set the same as the host device or program - XModem file transfers use 8 bits and TE II uses 7 bits). For error detection, an optional parity bit can mark whether the total of 0's or 1's were even or odd. A stop bit signals the end of the character.

Parity bits trap errors in the following manner: when the transmitting device frames a character, it tallies the number of binary 1's and 0's within the frame and attaches a parity bit. Then the receiving computer will count the different bits and compare the total to the parity bit sent. If a discrepancy is found a request for retransmission will be issued. The TI 99 computer uses three parity types:

ODD - Eighth data bit is logical zero if total number of logical 1's in the first dat bit is odd.

EVEN - Eighth data bit is logical zero if total number of logical 1's in the first dat bit is even.

NONE - Eighth data bit is ignored.

This parity bit must be set the same as the host computer, printer, et cetera. If you are logging on to a BBS, this and other configuration information will appear in the new user section.

Link control (or the rules for orderly transmission) is important so that data can flow without loss. The first parameter is the rate of transmission. Serial data transmission is measured in units of bits per second or bps. This is called the baud rate and on the TI can be 110, 300, 600, 1200, 2400, 4800, 9600 bps. Both machines must be operating at the same baud rate.

Also, the receiver must tell the transmitting computer when its buffer is full so that transmission can be temporarily halted. The TI and most other computers use X-ON/X-OFF. When the buffer is full, the receiving device sends an ASCII DC3 (X-OFF) signal until the buffer has cleared then it sends a ASCII DC1 (X-ON) to continue transmission.

Hopefully, this has cleared up some questions that might have come to your mind when reading the RS232 card manual. If you have further questions, send them to me and I will try to answer in the newsletter.

July 1987

Power Supply Fix

This tip comes from Raymond Langevin of the Northeastern 99ers.

If you have the misfortune of having your power supply quit on you, check the transformer voltage on the primary and secondary sides. If you have the primary voltage and no secondary voltage, then check the fuse that is located inside of the transformer. The fuse is located on the opposite side from the wire connections, at the lower part of the transformer. You will have to cut away the insulation (plastic housing) from the unit to expose the fuse, which is an inline type that is soldered to the white wire of the primary side of the transformer. Next check the power supply board. The bottom left hand side has two, one-amp diodes. You will probably find that one or both have shorted internally. Check them with a meter. If you find the values are faulty, change them.

This procedure can save you from a costly replacement and extended down-time of your computer. The transformer and power supply board costs $127.50 from Texas Instruments, not to mention the delay for shipment.

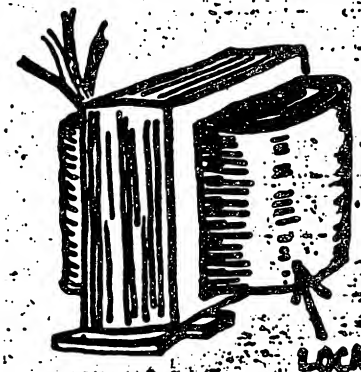

PRINT HEAD CLEANING

By Chuck Reinhart of LITI

It takes only three things to get good, dark, crisp print from your printer.

1. A properly adjusted printer
2. A good ribbon
3. A clean print head

The guide for the fine print wires gradually gets clogged with a mixture of lint, ink and oils from the ribbon. As this dirt builds up and dries out, the pin wires drag in the guide. The result is you get light, low-contrast print even from a new ribbon. The following is a procedure for cleaning the print head that is quick, simple and does not require removal of the print head.

-- Obtain an aerosol can of Color TV Tuner Cleaner (Radio Shack # 64-2320 or equivalent). Make sure the label states that it contains silicone, that it will not harm plastic and that it has a plastic tube to plug into the spray nozzle.

-- Power off the printer. Leave paper in the printer, but remove the ribbon. Gently move the print head to the middle of the carriage.

-- Cut a two inch square from a lint-free cotton handkerchief. Fold the cut cloth over on top of itself a couple of times until it is about the width of your printer ribbon and is about four layers.

-- Insert the cloth into the print head exactly where then ribbon was, between the pin guide and the ribbon shield. The cloth should not fit too tight.

-- Insert the tube into the aerosol spray cap. Put the end of the tube in contact with the cloth next to the pin guide of the print head and give a short quick press to wet the cloth.

-- Turn on the printer and send a page of print to the printer (self test can be used). Now move the cloth a little to the side so that you have a clean spot. If necessary, give the cloth another shot of fluid and print out another page.

-- Remove the cloth from the print head and print a page (without the ribbon). If you see any printing on the paper, put the cloth back into the print head and repeat the whole process until the page prints clean.

-- Finally install the ribbon and enjoy the improved print.

MODIFICATIONS TO THE COOLING SYSTEM IN THE TI 99/4A.
BY JOHN A. FRAZER

Recently, while changing the fan in the PE Box on my TI 99/4A I tried to figure out how the air flows through the PE Box. After some looking I realized that with only three cards in the PE Box the air has no reason to flow through the various cards. The exposed holes, in the air chamber at the front of the box, allow air to flow directly from the back of the PE Box straight through to the fan, by-passing the cards.

Simply putting tape over the unused air holes, in the side of the air chamber, will force air to be drawn through the cards. I used plastic tape but any tape such as masking tape or duct tape would work as well.

While I was doing this I saw the inside of the PE Box was getting dirty. I use my computer in a rather dusty office. The computer sometimes runs for long periods and I thought an air filter would help keep the insides cleaner.

I cut a cardboard file folder to the size and shape shown on the sketch. The filter was made from a loose woven paper towel formed into a cone shape to increase the surface area and the edges were stapled between two pieces of cardboard. The cardboard was then folded into a shallow box shape and taped over the back of the PE Box with the cone of paper extended into the area between the cards in the PE Box.

The airflow was tested with cigarette smoke and found to be adequate. The filter has been used for about two months now and I am very pleased with it. The outside of the filter is showing signs of the dirt that is being trapped while the inside of the PE Box seems to be staying much cleaner.

After making the filter out of a paper towel I have seen several other products that might be more suitable for an air filter. Some small gasoline engines use a foam filter that could be used. There is a filter made for aircraft use called a Bracket filter that would be ideal.

What is important is some form of air filter when these machines are used in a dusty environment. The amount of air that passes through the PE Box is amazing.

BELOW ARE SOME OF THE NEW GRAPHICS.

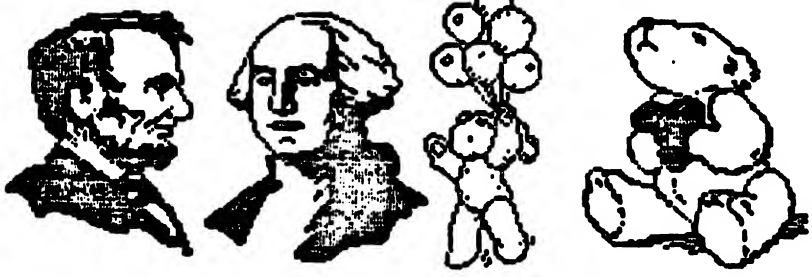

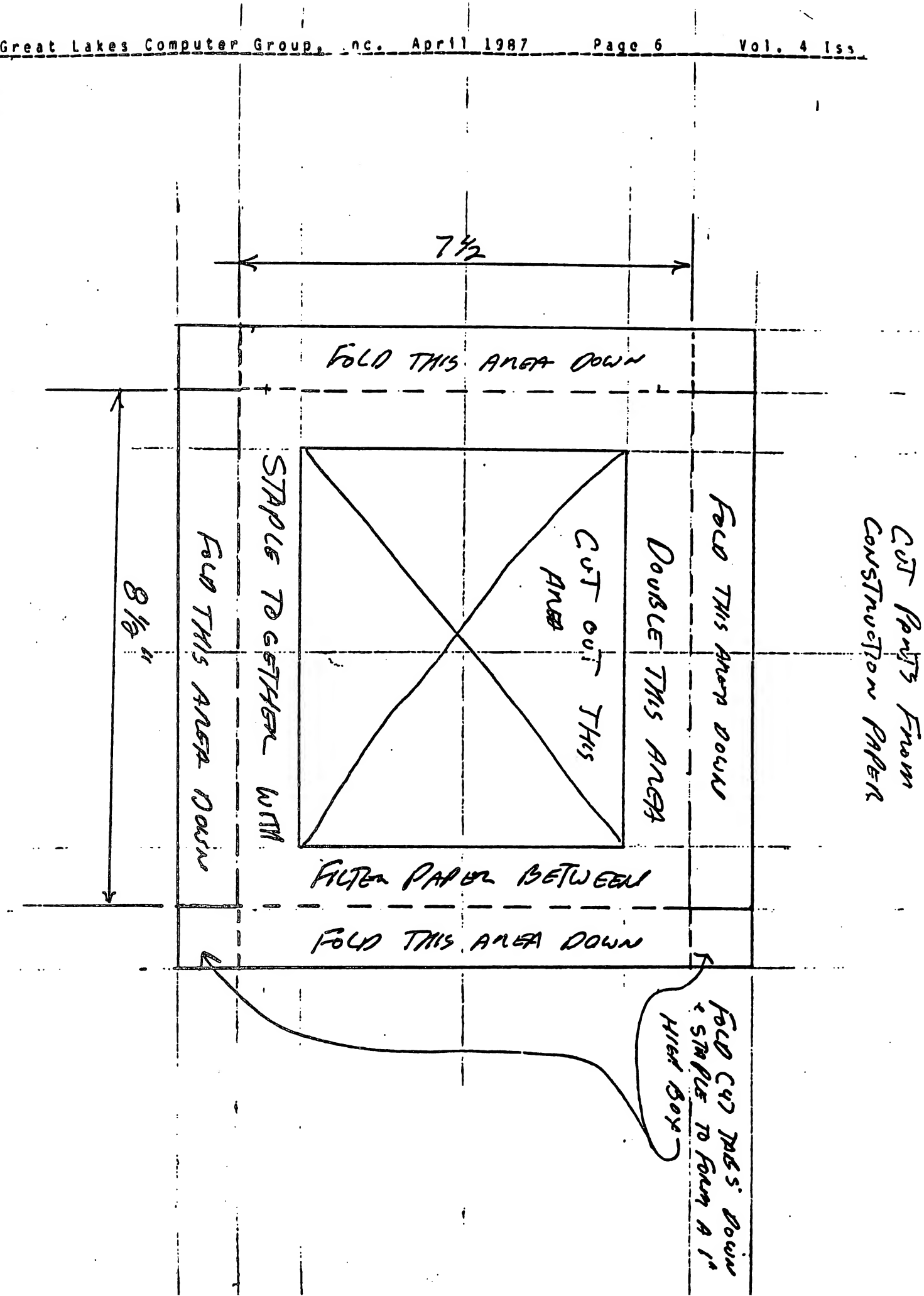
7½
FOLD THIS AREA DOWN
8½"
STAPLE TO GETHER WITH
FOLD THIS AREA DOWN
CUT OUT THIS AREA
FOLD THIS AREA DOWN
DOUBLE THIS AREA
FILTER PAPER BETWEEN
FOLD THIS AREA DOWN
FOLD CUT PIECES DOWN & STAPLE TO FORM A 1" HIGH BOX
CUT PARTS FROM CONSTRUCTION PAPER

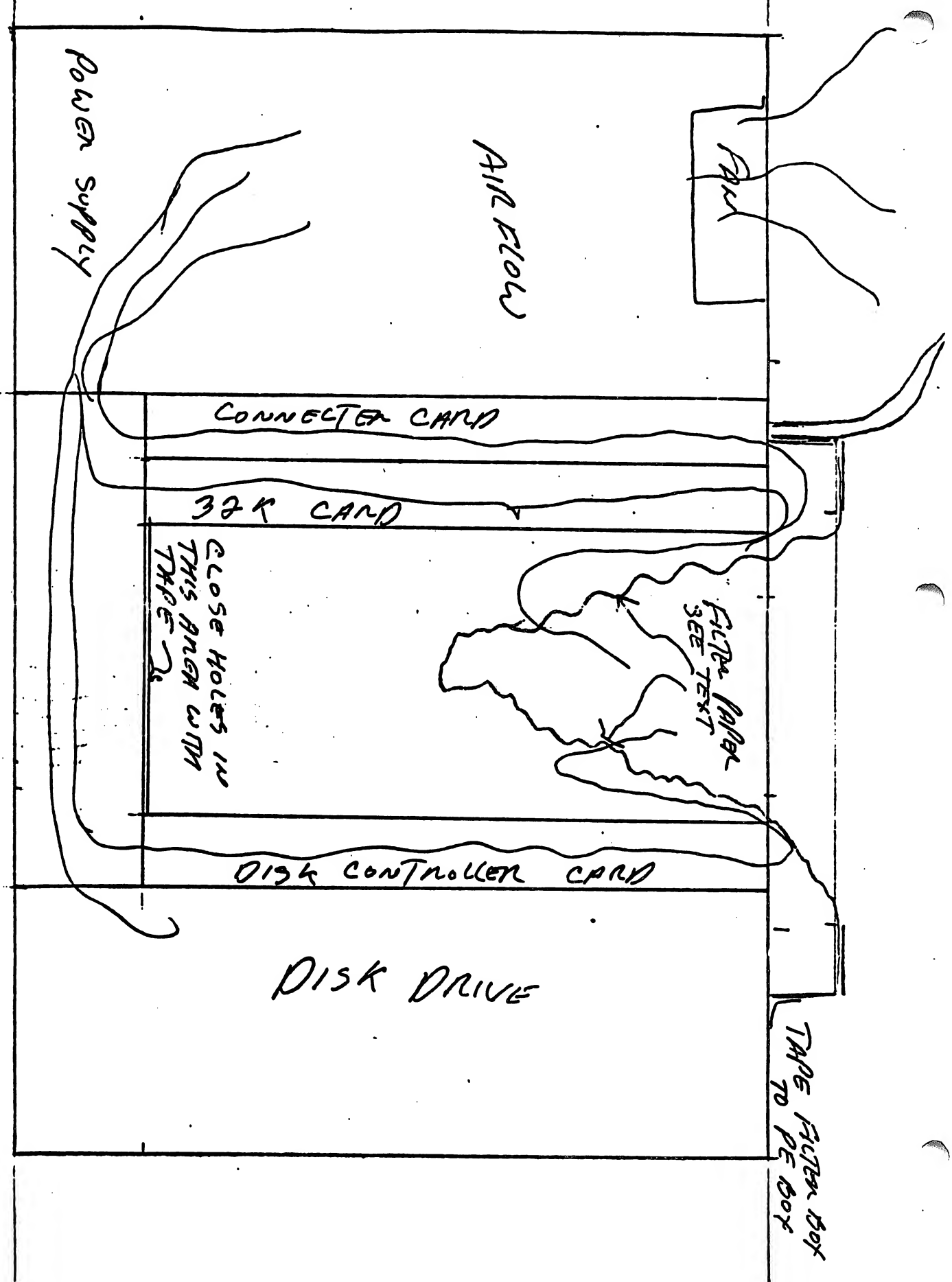
POWER SUPPLY
AIR FLOW
FAN
CONNECTOR CARD
32K CARD
CLOSE HOLES IN THIS AREA WITH TAPE
FILTER PAPER SEE TEXT
DISK CONTROLLER CARD
DISK DRIVE
TAPE FILTER BOX TO PC BOX

P-BOX POWER SUPPLY MODIFICATION. . .

This modification was performed to allow, first; the console to run cooler, and second; to "beef" up the power supply so it could supply enough power to run two disk drives in the PE-Box. The modification should be performed only by competent electronic technicians.

This modification involves removing the existing voltage regulators in the PE-Box and replacing them with higher capacity units. Also, three more voltage regulators will be added to supply power to the console. To mount the voltage regulators, holes will be drilled in the rear of the PE-Box so it can act as a heatsink.

You will need to purchase the following parts:

2 7812HK 12V 5A TO-3 regulator chips.
2 7805HK 5V 5A TO-3 regulator chips.
1 7905T -5V 1A TO-220 regulator chip.
5 0.47 uF/35V tatalum capacitors.
5 2.2 uF/35V tatalum capacitors.
1 4,700 uF/35V electrolytic capacitor.
1 2,200 ohm 1/2 watt resistor.
2 MR501 diodes
4 TO-3 transistor mounting sockets.
1 set of TO-220 insulating mounting hardware.
1 male and female 15 pin "d" connectors with hoods.
+ an assortment of colored wire, 22 gauge is ideal.

1. Remove the top cover to the PE-Box. Remove the flex-cable, PE-Box interface card, memory and RS-232 cards and any other cards you may have except the disk controller.

2. Remove the disk drive (two screws on top, two screws on bottom).

3. Remove the disk drive data cable from the disk controller.

4. Remove the disk controller card.

5. Remove the power switch knob (pull it off).

6. Remove the front cabinet from the P-Box (1 screw on left side, 1 screw on right side, top 4 screws on rear, 1 screw beside fuse, 1 screw behind disk drive, 3 screws on right bottom side, 1 bottom front screw, 2 bottom left screws, and one bottom screw about 2 inches back from were the PEP card mounts).

7. Pull the cabinet forward and set it aside. You will see the power supply section on the left side. (power transformer, in front of blower, and PC board to the left of the transformer). At this point, you may wish to install a different blower, such

(Continued on Page 5)

99/4A PE-BOX POWER SUPPLY MODIFICATION...Continued From Page 4

as a high quality boxer fan in place of the blower. I replaced mine and it is much quieter and it pulls more air.

8. The PC board is mounted via a plastic holder that angles to the right on the bottom. There are two screws, one at each end of the holder. Loosen them, but do not remove them. There are two connectors that lock on to the PC board on the rear. Push their tabs thru the board and pull the connectors off. There is also another connector on the front. Remove it the same way. Then slide out the PC board.

9. Locate the voltage regulator ICs (in the middle and center rear). Remove the regulator ICs.

10. Solder three different color wires approximately 6 inches long to the holes of the voltage regulator. Do this again for the other regulator.

11. Locate D3 and D4. Note the polarity of the diodes. Solder two diodes to the transformer side of the existing diodes. Be sure the cathodes go towards the transformer side. Solder the anode ends together. Solder a wire approximately 8 inches long, to the ends you just soldered on the diodes. Set the PC board aside.

12. Drill the TO-3 mounting holes on the rear of the expansion box. I mounted mine beside the blower, going downward for three of the regulators, and mounted the remaining below the blower above the fuse holder. You will have to take a razor blade and cut off part of the serial number tag so the chassis can be used for a heatsink. After drilling, be sure to file the holes smooth.

13. Install the 0.47uf capacitors to the inputs of the voltage regulator (pin 1) and install the 2.2uF capacitor to the outputs (pin 2). Solder the negative side to the chassis/ground lug on the mounting socket (this is only for the TO-3 devices).

14. Mount the P-Box 5V and 12V regulators. Use a good grade of silicone heatsinking compound when you install the regulators.

15. Solder the wires from the circuit board that went to the regulator that used to be on the board. Observe correct wiring.

16. Install the other two TO-3 regulators using heatsinking compound. On the 12V unit jump a wire from the 12V regulators input you just installed. Also jumper a ground wire. Install the capacitors, as before. Do the 5V regulator the same way. Solder a wire approximately 15 inches long to the outputs of the

(Continued On Page 6)

99/4A PE-BOX POWER SUPPLY MODIFICATION...Continued From Page 5

second set of TO-3 regulators. Route these wires to go out the card cage, thru an unused P-Box slot.

17. Install the TO-220 -5 Volt regulator. Be sure to use insulating hardware. Solder a wire to the output terminal and solder 2 wires to the ground terminal, approximately 15 inches long. Route the wires out of the PE-Box as above, with the exception of one of the ground wires. Jumper it to a ground on one of the TO-3 regulators. Add the bypass capacitors as above but note the polarity. Solder another wire to the input of the regulator, approximately 8 inches long. Route this wire to the front of the PE-Box near the power switch.

18. Install the PC board back in place. The wire from the rectifiers you installed needs to be soldered to the 4700 uF filter cap. The wire that came from the negative voltage regulator should be soldered to the same point. Install a ground wire from the filter cap to any ground point on the PC Board. Again observe polarity.

19. At this point, the PE-Box should be wired. Check for proper wiring. Turn on power to the PE-Box. Very quickly check the outputs of all regulators for proper operation (one +12 and +5 for the drive, one +12 and +5 and -5 for the computer). If all voltages are OK, then proceed with the next step. If you do not have a voltage check the input to the regulator and work it back. Check for shorts and proper wiring.

20. On the wires that you routed out of the PE-Box, you will need to identify them and solder on a 15 pin "D" connector, female jack. Use a 15 pin "D" so you will have no problems with hookup (the joysticks and cassette ports are 9 pins). I solder pin 7 to +12, +5 to pin 5, -5 to pin 3 and ground to pin 1.

21. Put your PE-Box back together. Bring your system up with the computer to make sure its OK. Test a disk drive.

CONSOLE MODIFICATION...

Check the wiring on your 15 pin "D" plug. you need to construct another 15 pin "D" connector, male with 4 wires approximately 15-30 inches long. After making the cable, hook it up to your system and turn the PE-Box on. Use a voltmeter to confirm wiring and mark each wire as to what voltage they are. Hookup is EXTREMELY sensitive at this point. If you wire a power supply to the wrong power buss in the 99/4A computer, I may take its last dying gasp and smoke. There

(Continued On Page 7)

99/4A PE-BOX POWER SUPPLY MODIFICATION...Continued From Page 6

will be no way to repair the damage as it will be extensive. Semiconductors do not like reverse voltages. They usually conduct very heavily and burn. *I CANNOT OVERSTRESS THIS POINT!*

1. Open the 99/4A console by removing all the bottom screws. You will see the power supply beside the keyboard and below the computer's PC board. You will see four wires connecting the computer to the existing power supply. With the power supply board exposed, turn on the computer and check the voltages where the wires connect to the power supply. Mark these carefully. Turn off the computer. Connect the power cable from the PE-Box to these wires, again noting correct hook up (+12 to +12, +5 to +5, -5 to -5, ground to ground). Remove the 4A's power supply. Keep it for the future.

2. Route the cable outside the existing hole where the power plug used to connect.

3. Take the big step. Hook the computer up to the PE-Box and the system. Bring the system up. All SHOULD be well. If you do not get your title screen, shut down, and check connections and pray that you did not burn up anything. You should have no problems at this point if you maintained correct wiring.

4. If all is well, shut down the system. I left the original power switch in the 4A computer. I superglued it in the ON position. You may wish to take it out and install a system reset switch (I highly recommend this because if the system locks up you will be powering down your whole system. You can also use a Widget.) Put your case back on and happy computing.

The best benefit is the lack of heat from the console. Normally, when I use my computer I am on for about two hours. It's strange not to feel any heat coming from the cartridge port area. Also I put two half height drives in the PE-Box and I have had no problems. If you use the parts I recommended, you will not be able to destroy the power supply. They are internally limited and the PE-Box power transformer will burn up before the regulators will. Also, just to relieve your worries, the PE-Box can handle a heavy load. It was designed to operate 8 cards.

EDITOR'S NOTE: The above article was "downloaded" from a Seattle area BBS by Bob Daggitt. We have reason to believe the article originated from the Houston Users' Group, commonly referred to as HUG. Neither HUG, nor the Siouxland 99ers assumes any responsibility for any damage caused by attempts to implement this modification. It is presented for your information only.

SURGE PROTECTION

I would like to take a few seconds to talk to you about voltage surge protectors for your computer. First i will explain what a voltage surge is. Your wall plug in your house or office, that you plug your computer into, is usually 110 to 120 volts AC. The power company tries to kep it taht way but it does not always happen. There are some little ghosts that sneek into the power lines from lightning, static discharges, and electrical surges from motors sarting and stoping. These things can cause the line voltage to increase as high as 6,000 volts for a fraction of a second. That surge can, even as short as it may be, can cause your computer to loose data and even cause expensive damage to your computer. There are ways to protect your computer from these surges. The best way is sto put a surge protector on the line voltage coming from the outlet. There are many protectors that are commercially availible. The cost ranges from about eight dollars for a single, soingle plug to the ones costing 100 dollars or more.

For those who are handy with tools, here is a project of low cost that will save you a bundle. The tools that you will need are a screw driver, a soldering iron, and maybe a pair of pliers. The supplies that you will need are solder, a multiple power strip, (get one with a switch) and three GE MOV's, GE V130LA10A. You can get this from Radio Shack (part # 276-570) with a cost of $ 1.49 each.

Take the back off of the power strip and you will see three wires running between the recpticals. Hook the MOV's into the wiring system according to the diagram below. Reinstall the cover after you have insulated the wires with black tape. This is one place where neatness rteally counts.

When you have completed this project you will have saved a small amount of money in the actual construction and probibly a lot of money in the long haul. I hope this article will be of help to you all.

ARTICLE FROM 99'ER LINES by Richard Weaver.

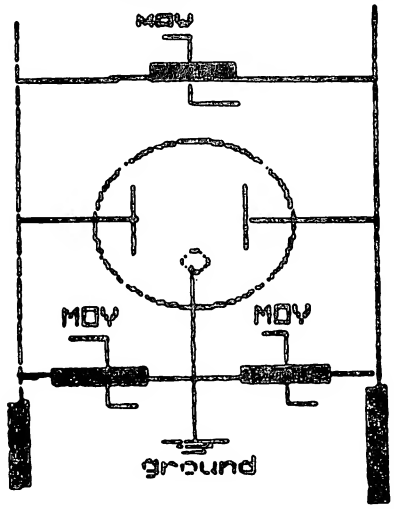

UNDER CONSTRUCTION

PARALLEL INTERFACE TO PRINTER

16 PIN PIO CONNECTOR		36 PIN PRINTER CONNECTOR	
PIN #	FUNCTION	PIN #	FUNCTION
1	Handshake Out	1	Strobe
2	Data LSB	2	Data LSB
3	Data	3	Data
4	Data	4	Data
5	Data	5	Data
6	Data	6	Data
7	Data	7	Data
8	Data	8	Data
9	Data MSB	9	Data MSB
10	Handshake In	11	Busy
11	Logic Ground	# 17 #	Chasis Ground
12 - 15	not used		not used
16	Logic Ground	# 16 #	Logic Ground

IMPORTANT

The PIO pin 11 connects to the frame or chasis ground of the printer and PIO pin 16 to the zero volt or logic ground of the printer.

The recommended female connector is manufactured by:

TRW AMSLEY PARTS 609-1360 (16 PIN CONNECTOR)
609-1361 (CABLE STRAIN RELIEF)

The cable strain relief is not mandatory but it does extend the life of the cable.

Several companies manufacture custom designed cables. Two of these companies are:

TEMEX CORPORATION PHONE # 219-277-7726
54333 TERRIS LANE
SOUTH BEND, IN 46635

DENKI DATA CORPORATION PHONE # 405-534-7764

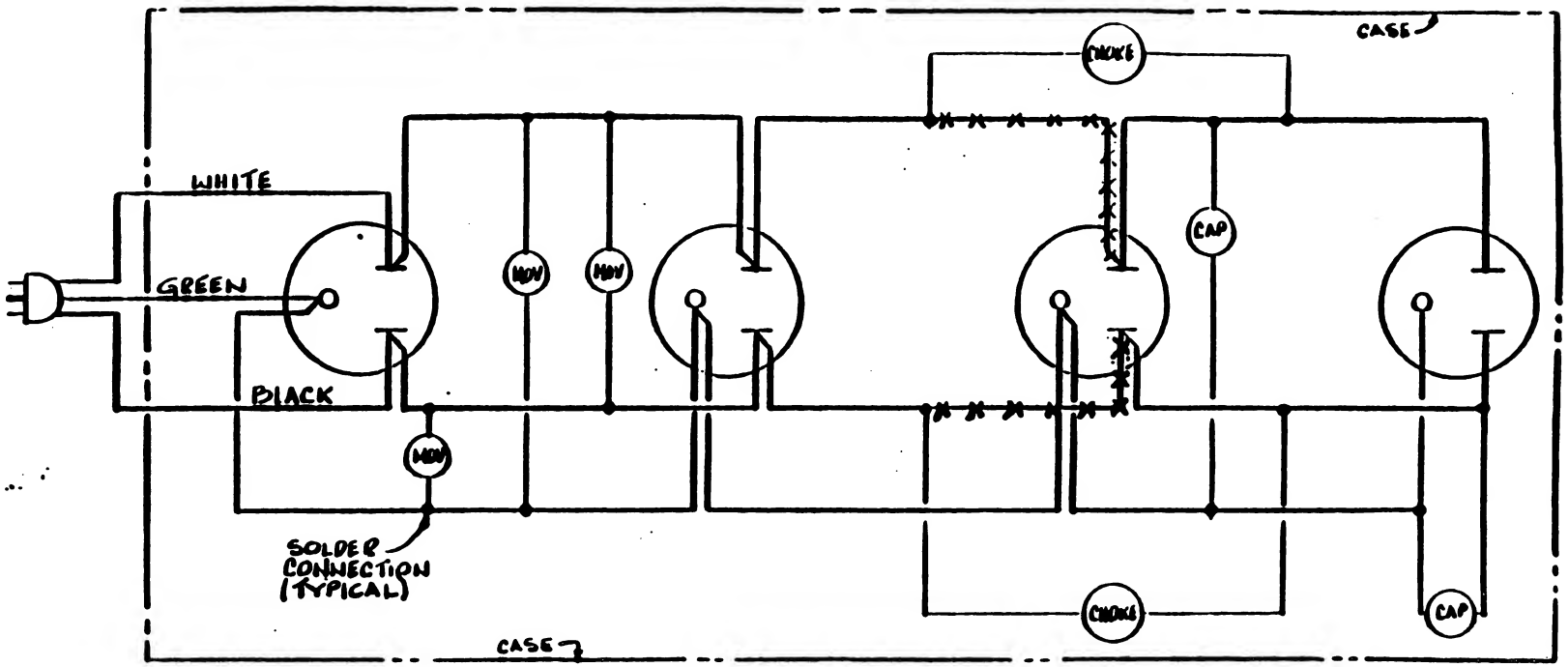

LEGEND:

———	EXIST. WIRING
———	NEW WIRING
~~—~~	REMOVE WIRE
MOV	METAL-OXIDE VARISTORS (RADIO SHACK 276-570)
CHOKE	100 MICROHERIZ RF (RADIO SHACK 273-102)
CAP	0.047 MICROFARAD CAPACITOR (RADIO SHACK 272-1052)

WIRING DIAGRAM
VOLTAGE-SURGE PROTECTOR

FOUR SOCKET

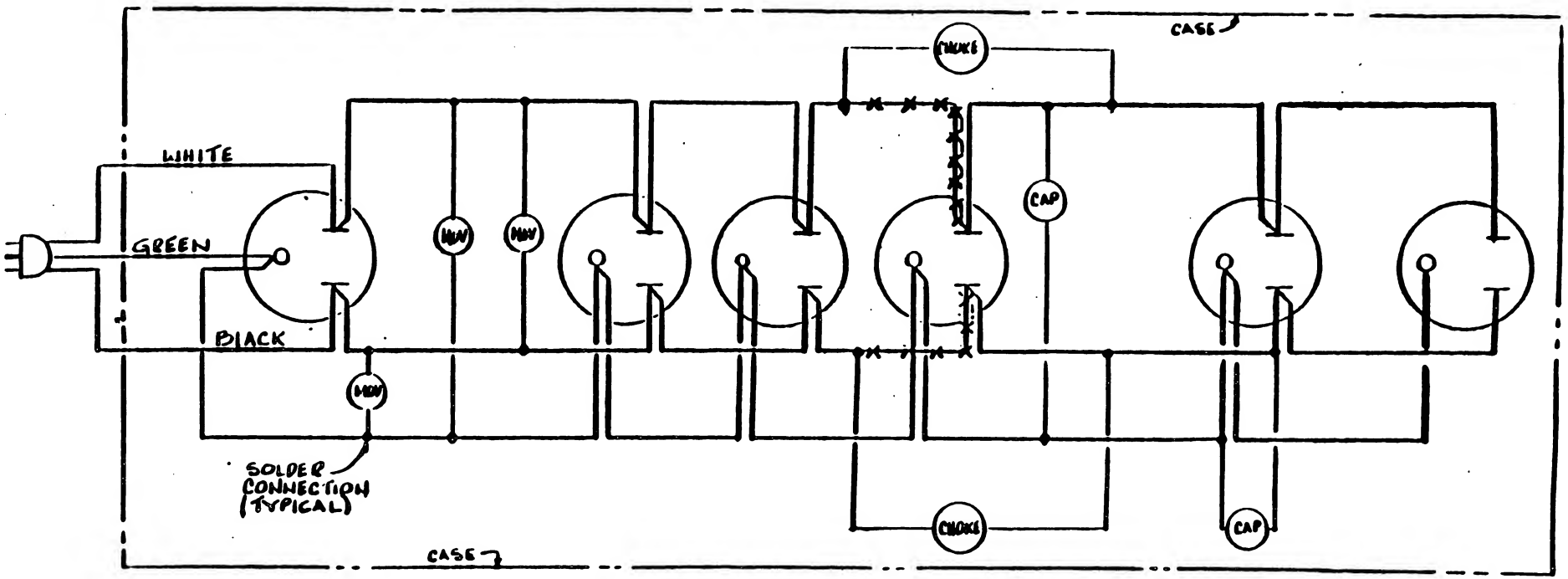

LEGEND:

———	EXIST. WIRING
———	NEW WIRING
~~X-X-X~~	REMOVE WIRE
MOV	METAL-OXIDE VARISTORS (RADIO SHACK 276-570)
CHOKE	100 MICROHENRIZ RF (RADIO SHACK 273-102)
CAP	0.047 MICROFARAD CAPACITOR (RADIO SHACK 272-1052)

WIRING DIAGRAM
VOLTAGE-SURGE PROTECTOR
SIX SOCKET

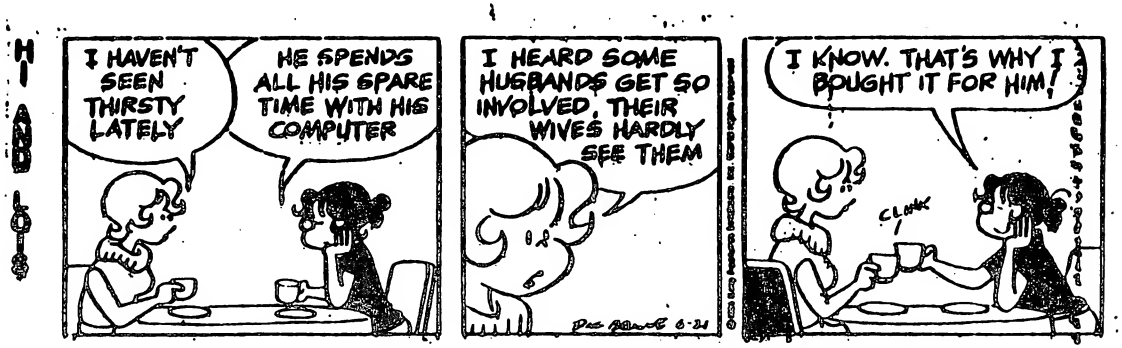

TI99 Operated Light/Appliance Controller

by Colin Mahoney, SFV 99ers

Have you ever had the need (or the desire) to control a group of devices such as Christmas lights, appliances, sprinklers, etc. by cycling them on and off in some sort of organized sequence? Here is an easy and inexpensive way to do it! Almost any UART (Universal Asynchronous Receiver/Transmitter) may be used. The clock for the UART should be 16 times the desired baud rate. A program which allows the user to create, edit, print, store, recall, and run sequences with this circuit is available from the San Fernando Valley Users Group or Colin Mahoney. Have fun!

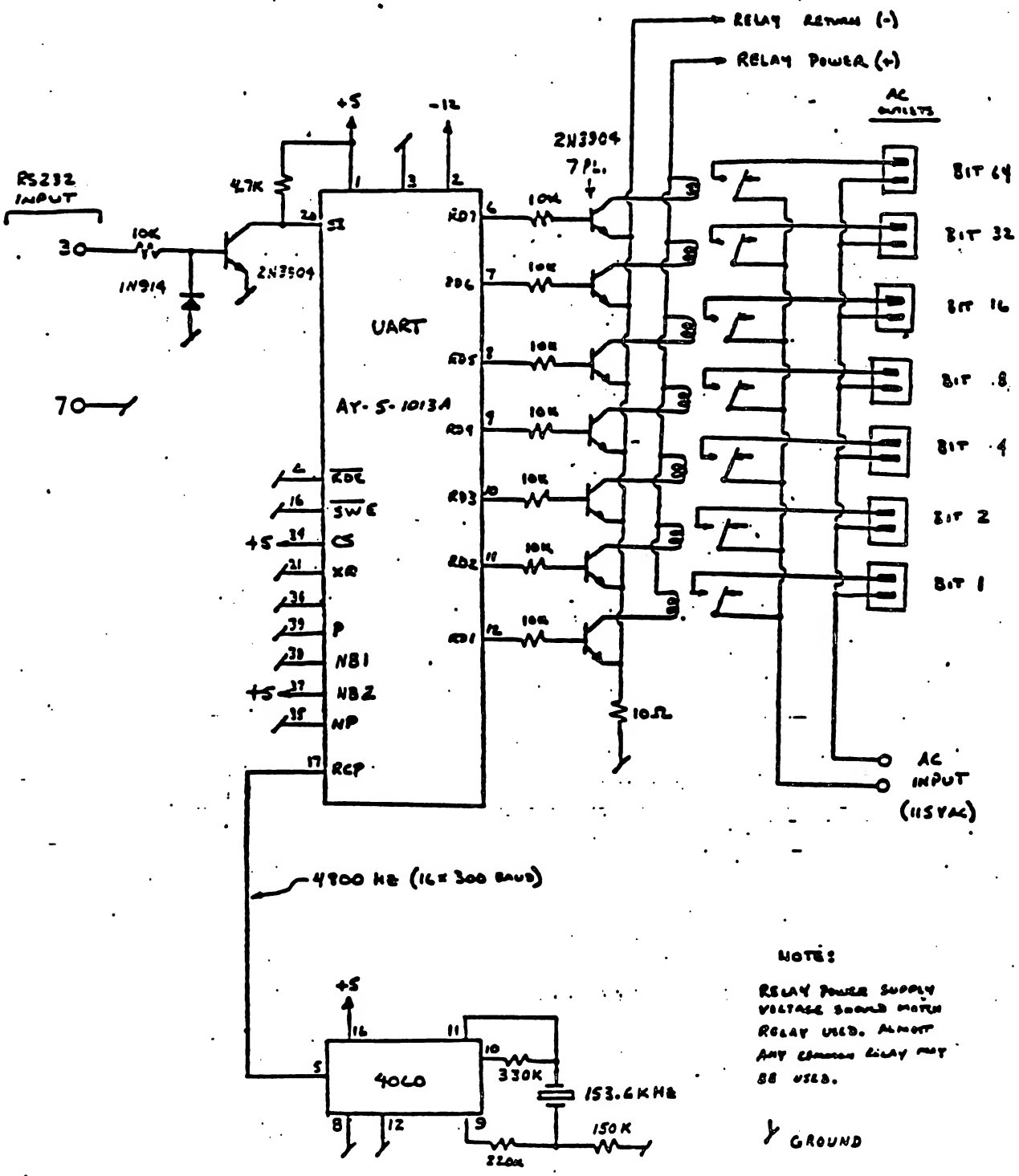

CABLE BOX

by Jim Edwards (SFV 99ers)

One feature of the T.I.99 that has never been hard for me to criticize was the physical size and design of the peripheral cable and connector. It always seemed to take up an undeserved portion of desk space. With only a goal in mind and virtually no "hardware saave", I set out to alleviate the problem. It seemed a simple task to build a compact connector that would plug in without disturbing the original components. Actually, the most difficult aspect of the project was rounding up the parts.

That proved to be an education. Card edges and their matching connectors have several configurations.. For example 22/44 means that it has 22 conductors on both sides. Spacings vary as well: .10, .125, .156, etc. This refers to the distance between the centers of the conductors. This project requires 44 conductors (22 on a side) with .10 centers. Finding a card edge connector was difficult enough, but finding the male counterpart was impossible. A section was literally cut out of an abandoned board.

I found most of the parts at Pacific Radio while the card was found in a card board box at All Electronics. Obviously, the exact parts may vary but be certain of the number of conductors and spacing. Once everything is rounded up, simply solder the wires together making sure to match one end to the other. Optionally, an interupt switch can be added for those screen dump programs that require one.

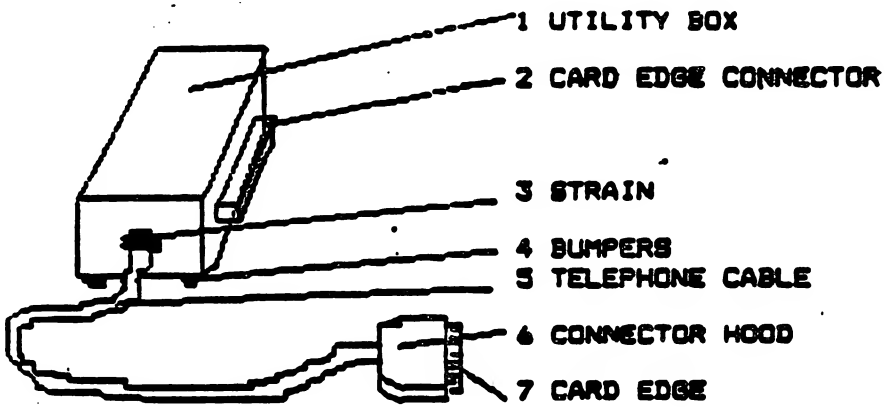

#	PART	MANUFACTURER	PT.#	COST
1	UTILITY BOX	CALRAD	90-785	$2.10
2	CARD EDGE CONNECTOR	GC ELECTRONICS	41-875	$4.74
3	STRAIN			.25
4	1/4" BUMPERS	RUSSELL IND.	REC-207SH	$1.79
5	50 CONDUCTOR TELEPHONE CABLE			
6	CONNECTOR HOOD	GC ELECTRONICS	41-1003	$2.48
7	CARD EDGE SCAVANGED FROM PC BOARD			$1.50
				$12.86

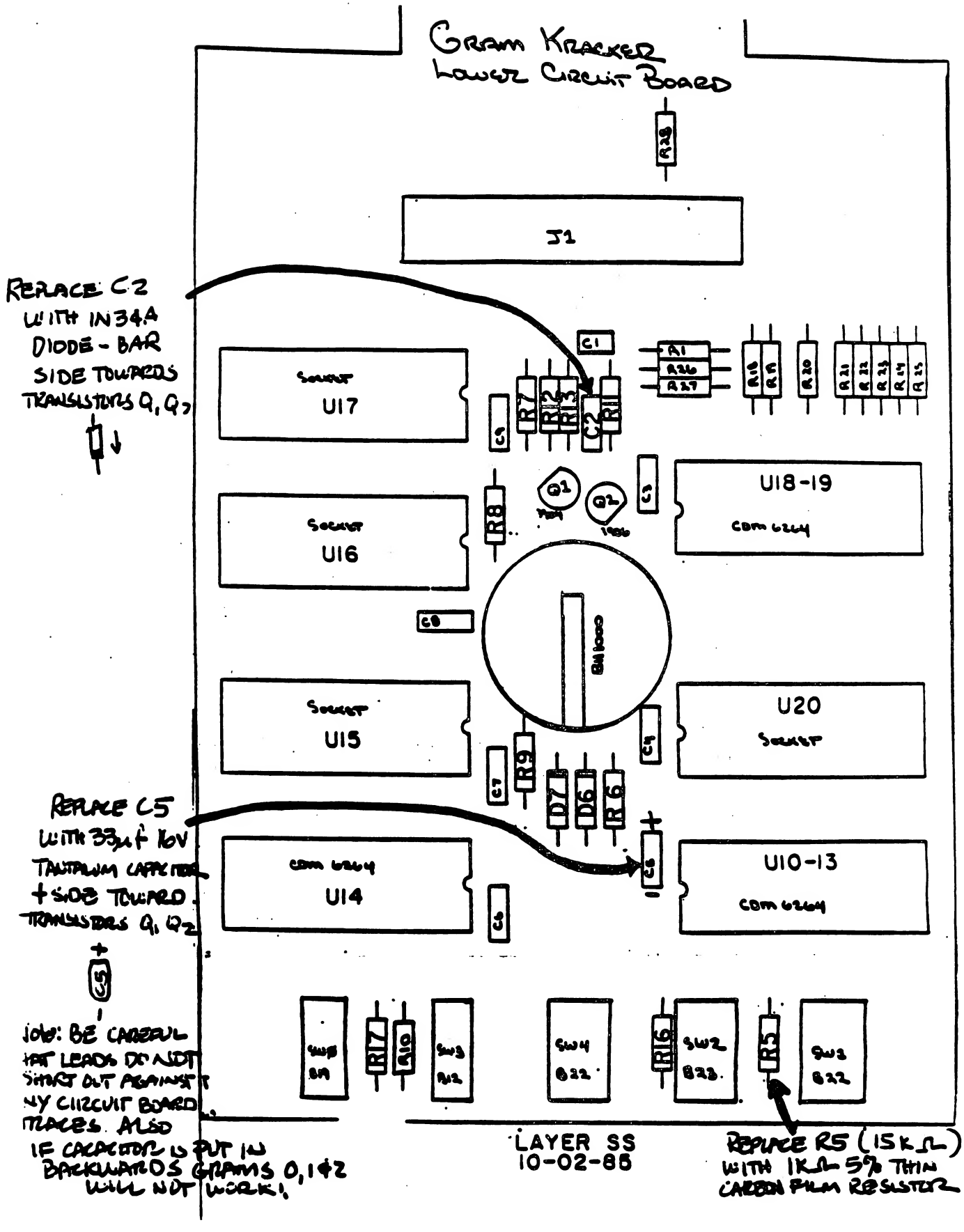
GRAM KRACKER
LOWER CIRCUIT BOARD
R28
J1
REPLACE C2
WITH IN34A
DIODE - BAR
SIDE TOWARDS
TRANSISTORS Q1, Q2
C1
R7
R12
R13
C2
R11
A1
A26
A27
A18
A19
A20
A21
A22
A23
A24
A25
SOCKET
U17
C9
R8
Q1
Q2
C3
U18-19
COM 6264
SOCKET
U16
C8
SOCKET
U15
C4
U20
SOCKET
C7
R9
D7
D6
R6
REPLACE C5
WITH 33µF 16V
TANTALUM CAPACITOR
+ SIDE TOWARD
TRANSISTORS Q1, Q2
C5
C6
U10-13
COM 6264
COM 6264
U14
C6
SW5
B21
R17
R10
SW3
B12
SW4
B22
R16
SW2
B23
R15
SW1
B22
NOTE: BE CAREFUL
HOT LEADS DO NOT
SHORT OUT AGAINST
NY CIRCUIT BOARD
TRACES. ALSO
IF CAPACITOR IS PUT IN
BACKWARDS GRAMS 0,1&2
WILL NOT WORK!
LAYER SS
10-02-85
REPLACE R5 (15KΩ)
WITH 1KΩ 5% THIN
CARBON FILM RESISTOR

EVER FORGET TO TURN ON YOUR P-BOX FIRST? THIS GADGET WILL SOLVE THE PROBLEM FOR YOU AS WELL AS HELP SORT OUT ALL THOSE CRAZY CORDS!

NOTE:
ANY RELAY MAY BE USED THAT HAS 110 VAC COIL AND A SET OF N.O. CONT.

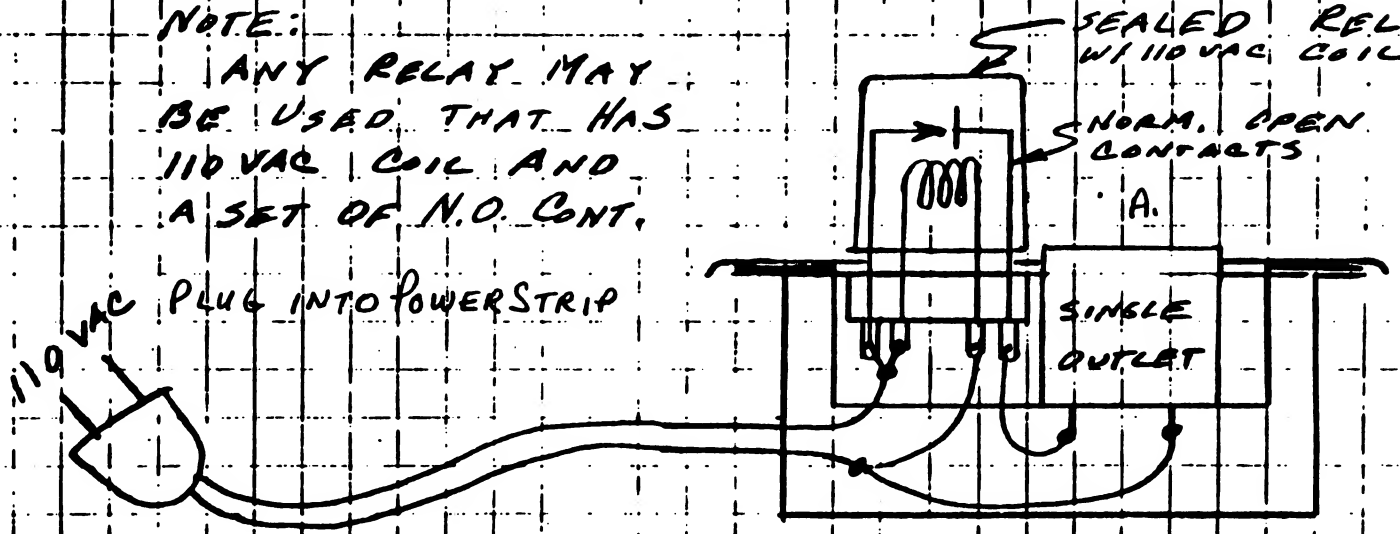

DELAYED OUTLET FOR COMPUTER

CAUSES DELAYED TURN ON FOR COMPUTER WITH P.E. BOX

DESIGNED BY HOWARD A. BRAIN
CARNATION CITY 99'ERS

A. PLUG CONSOLE HERE

PLUG P-BOX, ETC. INTO POWER STRIP

WIRING DIAGRAMS AND PIN POSITIONS

All plug and port numbers are as if you were looking straight into them.
Now you have something to use if a wire breaks or you want a weekend project.

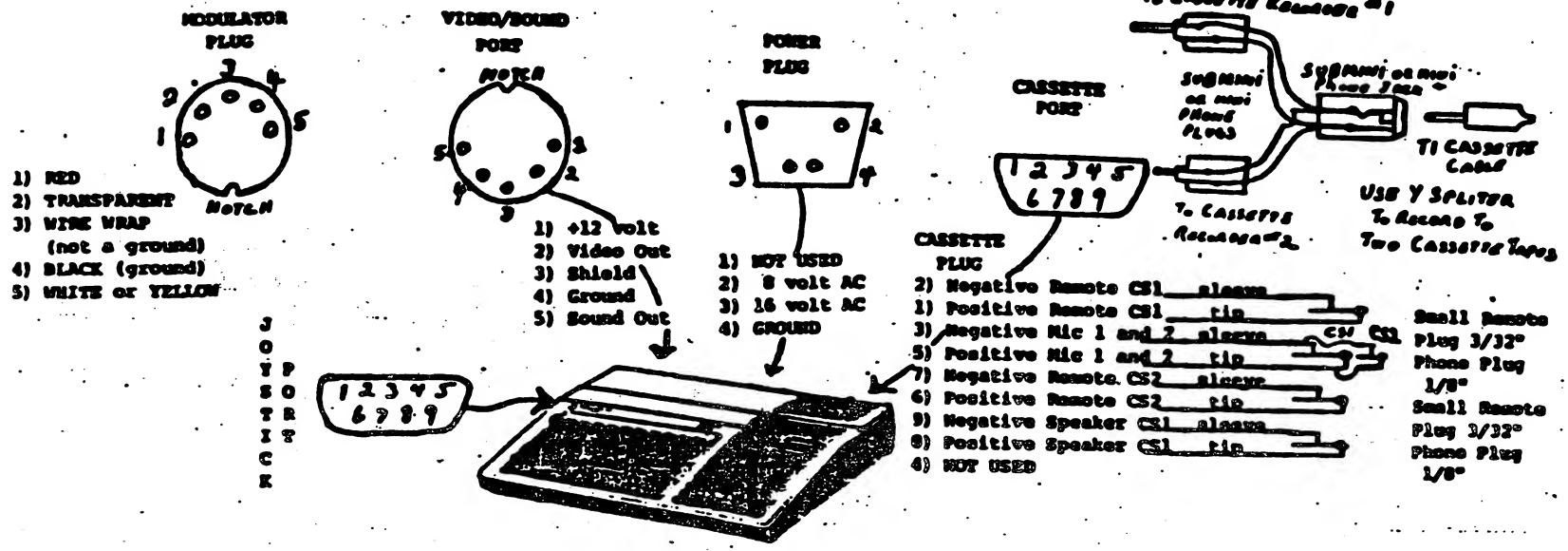

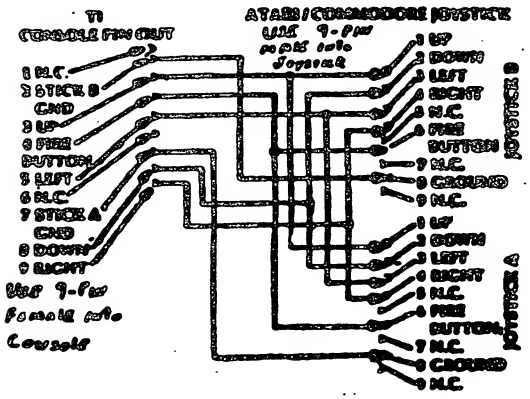

TI-99/4A LIGHTPEN

The TIL 404 Photo-Transistor is attached to one end of the wire and inserted into a Felt-Tip or Ball Point Pen Case. It should be held in place by Silicone glue. Use RG 174/U coaxial cable for wire. The other parts can be connected at the 9pin connector end and wraped in tape to hold them.

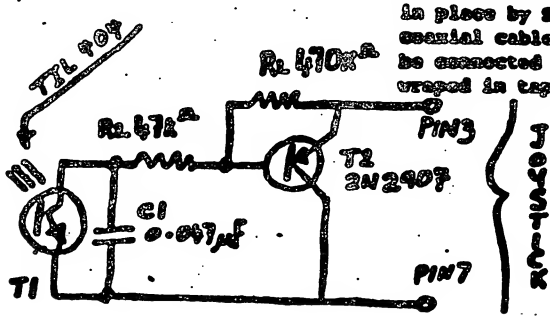

HARDWARE NEWS

PIN ASSIGNMENTS

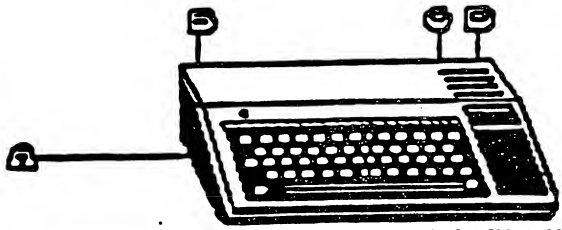

PIN ASSIGNMENTS APPEAR AS THEY WOULD IF YOU LOOKED DIRECTLY INTO THE PLUGS.

TI JOYSTICK PINS

1) N.C.
2) STICK B GROUND
3) UP
4) FIRE BUTTON
5) LEFT
6) N.C.
7) STICK A GROUND
8) DOWN
9) RIGHT

use female plug.

ATARI/COMMODORE JOYSTICK

B
1) UP
2) DOWN
3) LEFT
4) RIGHT
5) N.C.
6) FIRE BTN
7) N.C.
8) GROUND
9) N.C.

A
1) UP
2) DOWN
3) LEFT
4) RIGHT
5) N.C.
6) FIRE BTN
7) N.C.
8) GROUND
9) N.C.

use male plug.

FORT USER GROUP

FEBRUARY, 1987

POWER SUPPLY PLUG

1 2
3 4

1) NOT USED
2) 8 VOLTS AC
3) 16 VOLTS AC
4) GROUND

MODULATOR PLUG

1) RED
2) TRANSPARENT
3) WIRE WRAP (not a ground)
4) BLACK (ground)
5) WHITE or YELLOW

VIDEO/SOUND PLUG

1) +12 volt
2) VIDEO OUT
3) SHIELD
4) GROUND
5) SOUND OUT

CASSETTE PORT IN CONSOLE

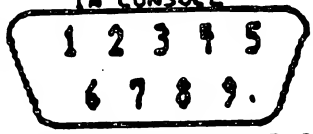

CASSETTE CABLE BELOW

2) NEGATIVE REMOTE CS1 — sleeve
1) POSITIVE REMOTE CS1 — tip
3) NEGATIVE MIC 1 & 2 — sleeve — CS1 CS2
5) POSITIVE MIC 1 & 2 — tip
7) NEGATIVE REMOTE CS2 — sleeve
6) POSITIVE REMOTE CS2 — tip
9) NEGATIVE SPEAKER CS1 — sleeve
8) POSITIVE SPEAKER CS1 — tip
4) NOT USED

½ SMALL REMOTE PLUG 3/32"
½½ PHONE PLUG 1/8"

USE Y SPLITTER TO RECORD TO TWO TAPES

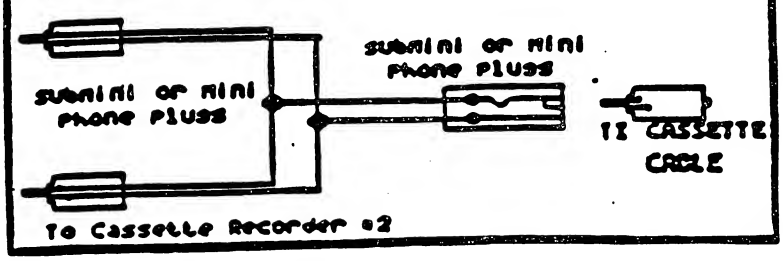

TI-99/4A MEMORY ARCHITECTURE
EDITED BY JOHN F. WILLFORTH

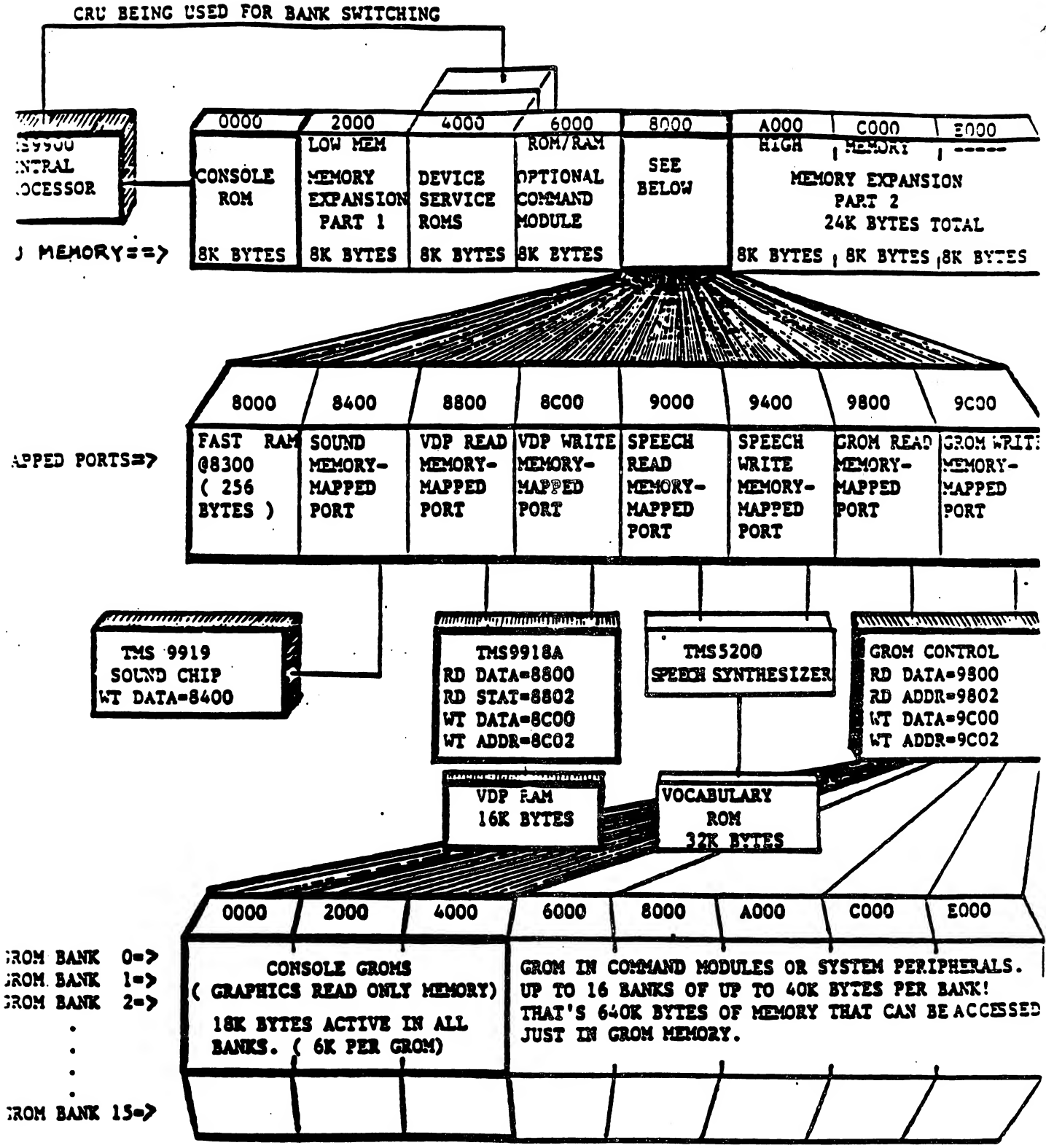

NOTE: THE HEAVY LINES INDICATE FEATURES INCLUDED WITHIN THE CONSOLE. I HOPE THAT THIS MAP WILL BE OF SOME USE IN CLEARING UP THE MEMORY SCHEME THAT WAS DEVELOPED BY TI TO MAKE MAXIMUM USE OF THE "GROM", AND THE ADDRESSING LIMITATIONS OF THE CPU (32K WORDS). FROM THIS DIAGRAM YOU CAN SEE, HOWEVER, THAT THE TI-99/4A HAS HAD THE POTENTIAL SINCE IT'S INCEPTION, TO BE A GREAT COMPUTING MACHINE.

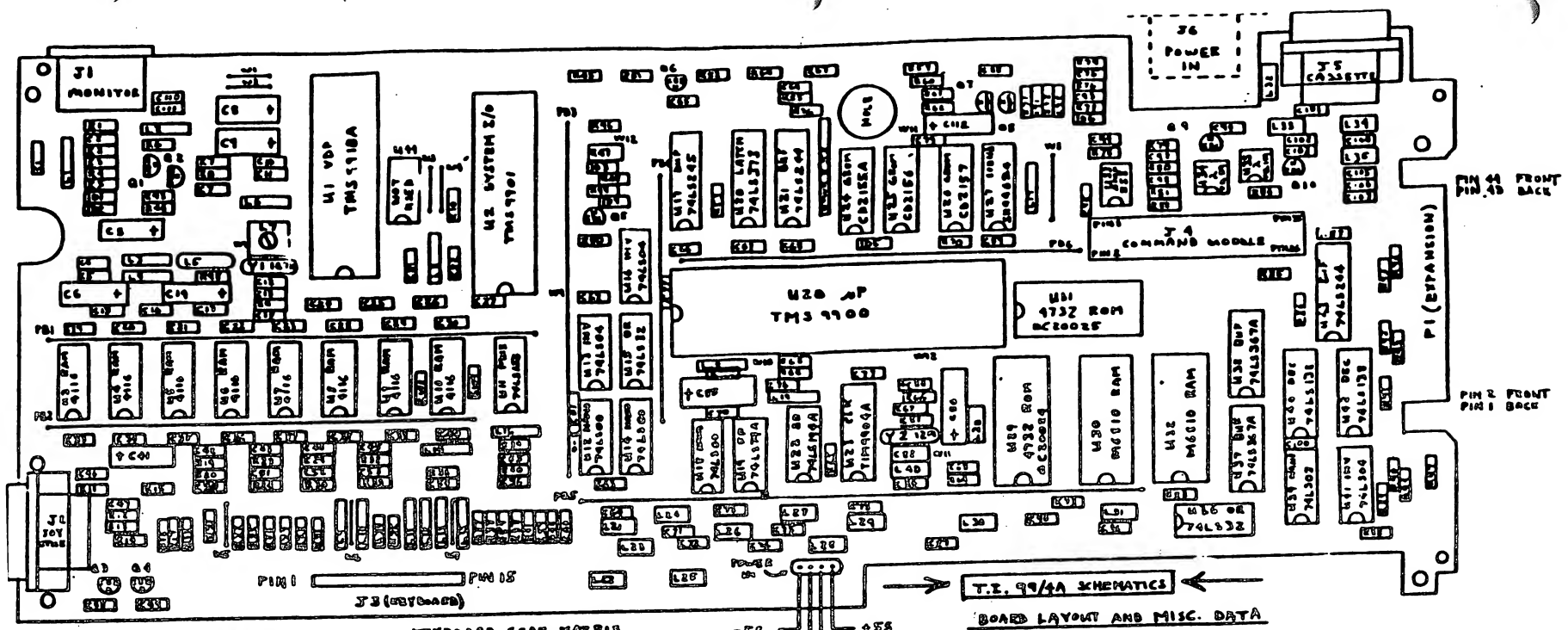

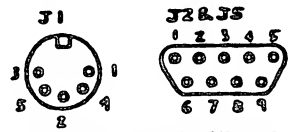

VIEWED FROM OUTSIDE OF CONSOLE

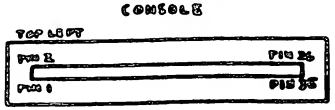

COMMAND MODULE PORT (J4A) VIA RIGHT ANGLE ADAPTER

KEYBOARD SCAN MATRIX (J3 PINOUT)

	P8	P13	P14	P15	P9	P12
P7	1	2	3	4	5	FCTN
P2	8	9	8	7	6	
P10	Q	W	E	R	T	CTRL
P1	P	O	I	U	Y	ENTER
P3	A	S	D	F	G	SHIFT
P4	;	L	K	J	H	SPACE
P11	Z	X	C	V	B	
P5	/	>	<	M	N	=

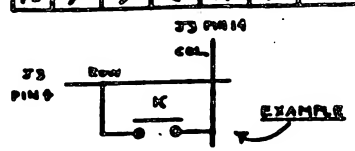

ALPHA LOCK

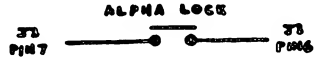

WE	U12-3 U36-5 U27-5 J4-32 U43-8
RWE	U28-61 U32-16 U30-16 U16-5
BJ	U23-7 U2-10 U43-8
RST	U23-4 U28-6 U41-3 U1-34 U2-1
CGE	U40-13 U1-15 U12-5
CSW	U36-6 U1-14
GCS	U41-12 J4-21 U29-10 U25-10 U26-10
DBIN	U16-2 U16-11 U17-11 U19-9 U18-9
RAMA	U36-8 U36-10 U2-5
LOAD	P1-13 U28-4
INTF	P1-4 U2-17
IAQB	U15-6 P1-41
RAMCS	U36-8 U32-11 U30-11 U12-12
MRDY	U39-3 P1-12 U27-4 U19-12
GRDY	U24-15 U25-13 U26-15 J4-21 U41-1
RDMCS	U43-15 U31-20 U29-20 U12-13

SNDCS	U40-14 U27-6
CRUIN	U28-31 U2-4 P1-33 J4-6
CRUOUT	U28-30 U15-9 U2-2
CRUCLK	U28-60 U2-3
CRUCLK	U16-12 J4-4 U43-15
DIESEL	U42-11 U40-4 U36-9
MEMENS	U15-3 U15-12 U13-3 P1-32 U42-4
AIS/CRUOUT	U18-11 J4-8 U43-13
DELAYEDRST	U41-6 P1-3
GCLK	U1-37 U24-13 U25-13 U26-13 U27-14 J4-27
SAIS	U16-8 U22-2 U20-11 U19-10 U12-9 U40-5
DBINA	U16-10 U19-4 J4-25 U41-8 U39-4 U24-12 U25-12 U26-12

SIGNAL TRACKING DIRECTORY

COPY DETECTOR DYE LOCATIONS	
◇1 — ◇2	M87
◇3 — ◇4	D89

COPYRIGHT 1983 FORMORALL APPLIED ELECTRONICS INC ALL RIGHTS RESERVED

GENERAL COMPONENT LAYOUT ON TI 99/4-A

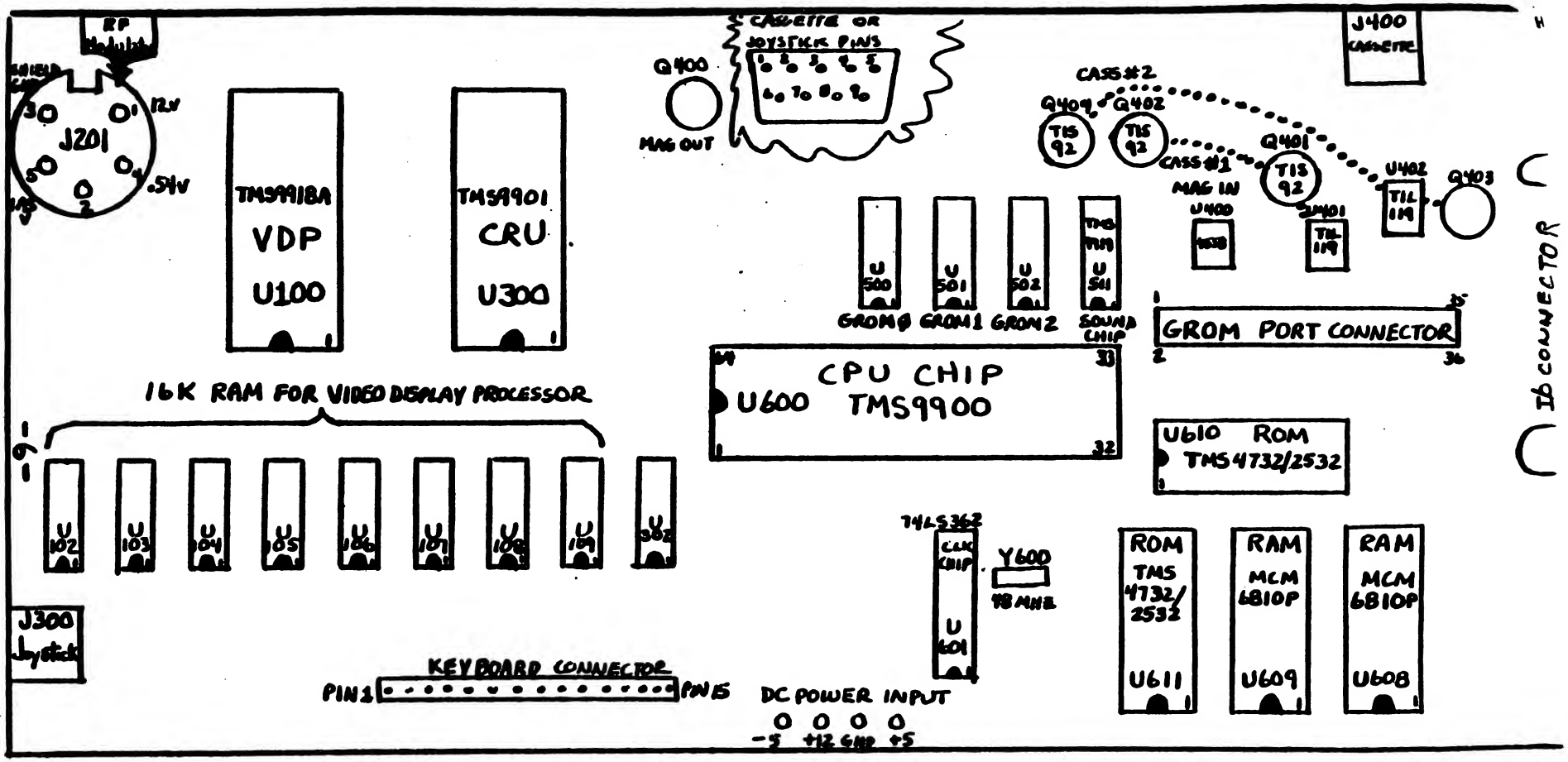

NOTES: I'VE MADE THIS LAYOUT, USING BOTH SAM'S PHOTO-FACTS, AND THE SCHEMATICS THAT I BOUGHT FROM T.I.. THIS IS BY ALL MEANS NOT THE ENTIRE PICTURE OF THE 99/4A, BUT IF YOU HAVE A SLIGHT FAMILIARITY WITH ELECTRONICS, AND SOME EQUIPTMENT, AS WELL AS ACCESS TO SOME OF THE CHIPS OR OTHER COMPONENTS, YOU JUST MIGHT BE ABLE TO TRACK DOWN A PROBLEM WITH YOUR CONSOLE, AND SAVE YOURSELF NEARLY $40.. I HAVE FIXED 8 CONSOLES IN THE LAST 5 MONTHS, AND JUST AS A POSSIBLE AID, I'LL GIVE YOU THE COMPLAINT, AND THE FIX. NO VIDEO, OR A LOT OF SNOW WITH WEAK SIGNAL = DEFECTIVE RF MODULATOR (OR BROKEN WIRES). BLACK SCREEN WITH LOUD NOISE = ANY OF THE GROMS PARTICULIARLY GROM 1, OR A DEFECTIVE CARTRIDGE. TITLE SCREEN BROKEN OR PROGRAM OPERATES STRANGELY = NEARLY ALL OF THE ABOVE CONDITIONS CAN BE CAUSED BY A DEFECTIVE VDP CHIP OR THE 8 RAM CHIPS. I'VE ALSO HAD THE CONSOLE WORK FINE, BUT WHEN HOOKED UP TO A PEB, PROBLEMS WITH SYSTEM HANGING OCCURRED BECAUSE OF A DEFECTIVE I/O PORT TRANSCEIVER CHIP. YES THERE IS A LOT TO TROUBLESHOOTING A CONSOLE, AND THIS IS MADE MORE DIFFICULT BY THE FACT THAT TI DID NOT SOCKET ALL OF THE MAJOR CHIPS. IF IT IS NOT THE VDP, THE 3 GROM CHIPS, THE SOUND CHIP, AND SOMETIMES THE CLOCK CHIP, WHICH ARE THE MOST COMMONLY SOCKETED CHIPS, YOU MAY WISH TO HAVE AN EXPERT FIX YOUR MACHINE.

GOOD LUCK! JOHN F. WILLFORTH
WEST PENN 99ER'S CLUB
THANK YOU

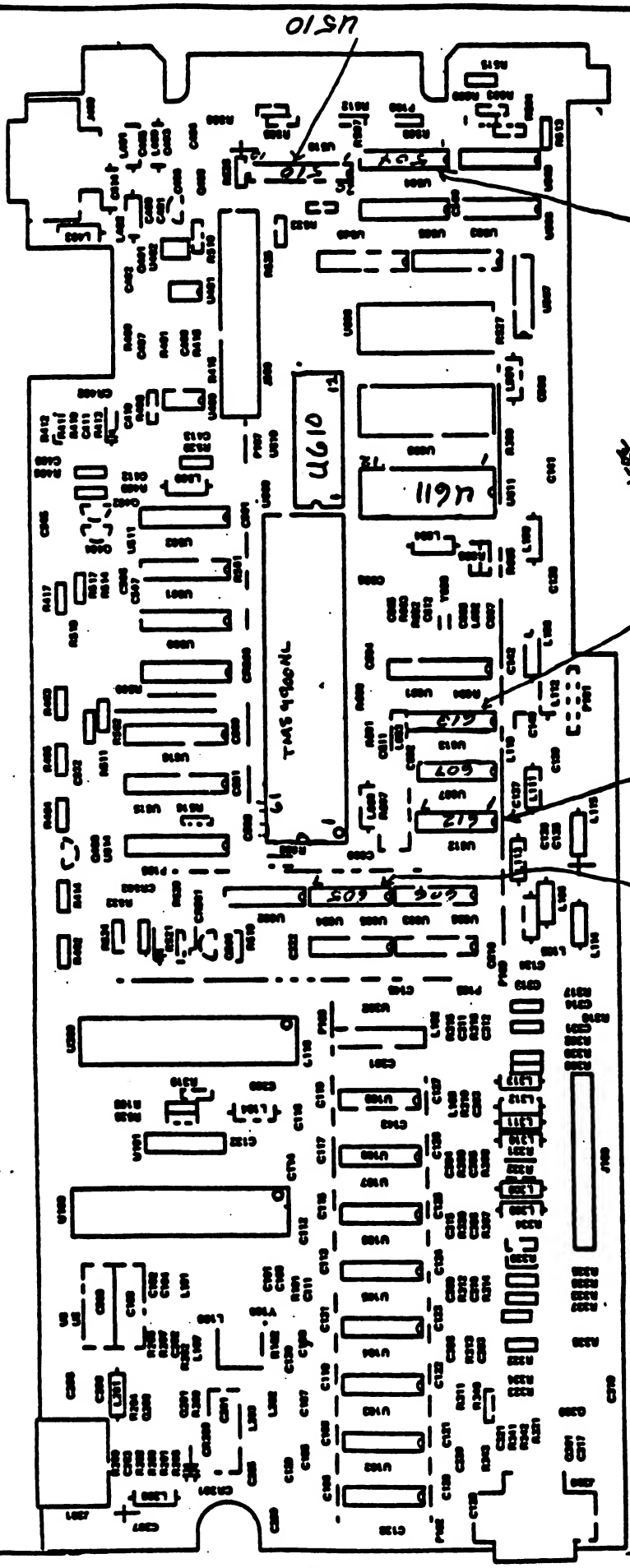

TI-99/4A LOGIC BOARD COMPONENT LOCATION DIAGRAM